CITY OF ROCKAWAY BEACH
N PACIFIC ST IMPROVEMENTS PROJECT

ROCKAWAY BEACH, OREGON

JULY, 2025

VICINITY MAP

NTS

OWNER:

CITY OF ROCKAWAY BEACH
P.O. BOX 5
276 HIGHWAY 101 SOUTH
ROCKAWAY BEACH, OREGON 97136
CONTACT: DAN EMERSON
PH: (503) 374-0586
FAX: (503) 355-8221
EMAIL: PUBLICWORKS@CORB.US

CIVIL ENGINEER

HBH CONSULTING ENGINEERS, INC.
501 E FIRST STREET
NEWBERG, OREGON 97132
CONTACT: MATTHEW DEL MORO, PE
PH: (503) 554-9553
FAX: (503) 537-9554
EMAIL: MDELMORO@HBH-CONSULTING.COM

SURVEYOR

ONION PEAK DESIGN
11460 EVERGREEN WAY NE
CONTACT: ERICK WHITE
PH: (503) 440-4403
EMAIL: ERICK. OPD@GMAIL.COM

PROJECT ADDRESS

PROJECT SITE:
N PACIFIC STREET BETWEEN N 3RD AVE AND N 9TH AVE
ROCKAWAY BEACH, OR 97136

LOCATE

(48 HOUR NOTICE PRIOR TO EXCAVATION)

OREGON LAW REQUIRES YOU TO FOLLOW THE RULES ADOPTED BY THE OREGON UTILITY NOTIFICATION CENTER. THOSE RULES ARE SET FORTH IN OAR 952-001-0010 THROUGH 952-001-0090 & ORS 757.542 THROUGH 757.562 AND ORS 757.993. YOU MAY OBTAIN COPIES OF THE RULES FROM THE CENTER BY CALLING (503) 246-1987. ONE CALL SYSTEM NUMBER 1-800-332-2344.

SHEET INDEX

SHEET LIST

LEGEND

PROPOSED

- W = PROPOSED WATER MAIN
- WS = PROPOSED WATER SERVICE
- = PROPOSED WATER VALVE
- = PROPOSED ASPHALT

EXISTING

- = MONUMENT TABLE DESIGNATION
- = MONUMENT FOUND
- = WATER VALVE
- = WATER METER
- = FIRE HYDRANT
- = POWER METER
- = GUY POLE
- = POWER POLE
- = GUY ANCHOR
- = POWER TRANSFORMER
- = SEWER CLEANOUT
- = COMMUNICATION MANHOLE OR VAULT
- = SANITARY SEWER MANHOLE
- = SANITARY SEWER CLEANOUT
- = STORM DRAIN CATCH BASIN
- = CULVERT
- = CABLE RISER
- = SIGNS
- = TOP OF CURB
- = CURB GUTTER
- = PROPERTY LINE
- = PUBLIC RIGHT-OF-WAY
- = TAX LOT LINE
- = PLAT LOT LINE
- OHP — = OVERHEAD POWER
- UGP — = UNDERGROUND POWER
- = FIBEROPTIC LINE
- = EDGE OF ROCK
- SS — = SANITARY SEWER LINE
- SD — = STORM DRAIN LINE
- W — = WATER LINE
- = EDGE OF PAVEMENT
- = EDGE OF CONCRETE
- = MAJOR CONTOUR INTERVAL (5')
- = MINOR CONTOUR INTERVAL (1')
- = CENTERLINE OF PUBLIC ROAD
- = RAILROAD CENTERLINE
- = ASPHALT
- = BUILDING
- = CONCRETE
- = DECK
- = GRAVEL ROAD
- = BRICK PAVERS

AREA MAP

NTS

REGISTERED PROFESSIONAL ENGINEER
90839PE
Matthew Del Moro, PE
OREGON
JULY 10, 2018
MATTHEW C. DEL MORO
EXPIRES 12/31/2025

H B H
CONSULTING ENGINEERS
501 E First Street
Newberg, Oregon 97132
503/554-9553 ■ fax 503/537-9554
email: mail@hbh-consulting.com

Designed By: ZHH | Drawn By: JCA | Checked By: MCD | Submittal No: | BID SET

File: L:\2025-005.01\4-Design\DWG\COVER SHEET.dwg

REV.	DATE	DESCRIPTION	BY

0" 1"
IF THIS LINE IS NOT 1 INCH SCALE IS NOT AS SHOWN

CITY OF ROCKAWAY BEACH
PO BOX 5, ROCKAWAY BEACH, OR. 97136

N PACIFIC ST IMPROVEMENTS PROJECT
ROCKAWAY BEACH
COVER SHEET

Sheet No. C-1
Date 7/17/2025
1 of 14
2025-005.01

GENERAL NOTES

1. CONTRACTOR SHALL PROCURE AND CONFORM TO ALL CONSTRUCTION PERMITS REQUIRED BY THE CITY OF ROCKAWAY BEACH AND TILLAMOOK COUNTY.
2. CONTRACTOR SHALL PROVIDE ALL BONDS AND INSURANCE REQUIRED BY PUBLIC AND/OR PRIVATE AGENCIES HAVING JURISDICTION.
3. ALL MATERIALS AND WORKMANSHIP FOR FACILITIES IN STREET RIGHT-OF-WAY OR EASEMENTS SHALL CONFORM TO APPROVING AGENCIES' CONSTRUCTION SPECIFICATIONS WHEREIN EACH HAS JURISDICTION, INCLUDING BUT NOT LIMITED TO THE CITY, COUNTY, OREGON HEALTH DIVISION (OHD) AND THE OREGON DEPARTMENT OF ENVIRONMENTAL QUALITY (DEQ).
4. UNLESS OTHERWISE APPROVED BY THE PUBLIC WORKS SUPERINTENDENT, CONSTRUCTION OF ALL PUBLIC FACILITIES SHALL BE DONE BETWEEN 7:00 A.M. AND 6:00 P.M., MONDAY THROUGH FRIDAY, AND BETWEEN 9:00 A.M. AND 6:00 P.M. SATURDAY.
5. THE CONTRACTOR SHALL PERFORM ALL WORK NECESSARY TO COMPLETE THE PROJECT IN ACCORDANCE WITH THE APPROVED CONSTRUCTION DRAWINGS INCLUDING SUCH INCIDENTALS AS MAY BE NECESSARY TO MEET APPLICABLE AGENCY REQUIREMENTS AND PROVIDE A COMPLETED PROJECT.
6. CONTRACTOR TO NOTIFY CITY, COUNTY, ODOT AND ALL UTILITY COMPANIES A MINIMUM OF 48 BUSINESS HOURS (2 BUSINESS DAYS) PRIOR TO START OF CONSTRUCTION, AND COMPLY WITH ALL OTHER REQUIREMENTS OF ORS 757.541 TO 757.571.
7. ANY INSPECTION BY THE CITY, COUNTY OR OTHER AGENCIES SHALL NOT, IN ANY WAY, RELIEVE THE CONTRACTOR FROM ANY OBLIGATION TO PERFORM THE WORK IN STRICT COMPLIANCE WITH THE APPLICABLE CODES AND AGENCY REQUIREMENTS.
8. CONTRACTOR SHALL ERECT AND MAINTAIN BARRICADES, WARNING SIGNS, TRAFFIC CONES (AND ALL OTHER TRAFFIC CONTROL DEVICES REQUIRED) PER CITY, COUNTY AND ODOT REQUIREMENTS IN ACCORDANCE WITH THE CURRENT MUTCD (INCLUDING OREGON AMENDMENTS). ACCESS TO DRIVEWAYS SHALL BE MAINTAINED AT ALL TIMES. ALL TRAFFIC CONTROL MEASURES SHALL BE APPROVED AND IN PLACE PRIOR TO ANY CONSTRUCTION ACTIVITY.
9. RECORD DRAWINGS. THE CONTRACTOR SHALL MAINTAIN ONE COMPLETE SET OF APPROVED DRAWINGS ON THE CONSTRUCTION SITE AT ALL TIMES WHEREON HE WILL RECORD ANY APPROVED DEVIATIONS IN CONSTRUCTION FROM THE APPROVED DRAWINGS, AS WELL AS THE STATION LOCATIONS AND DEPTHS OF ALL EXISTING UTILITIES ENCOUNTERED. THESE FIELD RECORD DRAWINGS SHALL BE KEPT UP TO DATE AT ALL TIMES AND SHALL BE AVAILABLE FOR INSPECTION BY THE CITY UPON REQUEST.
10. UPON COMPLETION OF CONSTRUCTION OF PUBLIC FACILITIES, CONTRACTOR SHALL SUBMIT A CLEAN SET OF FIELD RECORD DRAWINGS CONTAINING ALL AS-BUILT INFORMATION TO THE DESIGN ENGINEER FOR USE IN THE PREPARATION OF AS-BUILT DRAWINGS FOR SUBMITTAL TO THE CITY.
11. THE CONTRACTOR SHALL SUBMIT A SUITABLE MAINTENANCE BOND PRIOR TO FINAL PAYMENT WHERE REQUIRED BY PUBLIC AND/OR PRIVATE AGENCIES HAVING JURISDICTION.

EXISTING UTILITIES + FACILITIES

1. ATTENTION: OREGON LAW REQUIRES YOU TO FOLLOW RULES ADOPTED BY THE OREGON UTILITY NOTIFICATION CENTER. THOSE RULES ARE SET FORTH IN OAR 952-001-0010 THROUGH OAR 952-001-0090. YOU MAY OBTAIN COPIES OF THE RULES BY CALLING THE CENTER. (NOTE: THE TELEPHONE NUMBER FOR THE OREGON UTILITY NOTIFICATION CENTER IS (503) 232-1987). FOR UTILITY LOCATES, CALL 811.
2. THE LOCATION AND DESCRIPTIONS OF EXISTING UTILITIES SHOWN ON THE DRAWINGS ARE COMPILED FROM AVAILABLE RECORDS AND/OR FIELD SURVEYS. THE ENGINEER OR UTILITY COMPANIES DO NOT GUARANTEE THE ACCURACY OR THE COMPLETENESS OF SUCH RECORDS. CONTRACTOR SHALL FIELD VERIFY SIZES AND LOCATIONS OF ALL EXISTING UTILITIES PRIOR TO CONSTRUCTION.
3. THE CONTRACTOR SHALL LOCATE AND MARK ALL EXISTING PROPERTY AND STREET MONUMENTS PRIOR TO CONSTRUCTION. ANY MONUMENTS DISTURBED DURING CONSTRUCTION OF THE PROJECT SHALL BE REPLACED BY A REGISTERED LAND SURVEYOR AT THE CONTRACTOR'S EXPENSE. THE MONUMENTS SHALL BE REPLACED WITHIN A MAXIMUM OF 90 DAYS, AND THE COUNTY SURVEYOR SHALL BE NOTIFIED IN WRITING AS REQUIRED BY ORS 209.150.
4. CONTRACTOR SHALL FIELD VERIFY LOCATION AND DEPTH OF ALL EXISTING UTILITIES WHERE NEW FACILITIES CROSS OR ARE CLOSELY PARALLEL WITH EXISTING FACILITIES. ALL UTILITY CROSSINGS MARKED OR SHOWN ON THE DRAWINGS SHALL BE POTHOLED USING HAND TOOLS OR OTHER NON-INVASIVE METHODS PRIOR TO EXCAVATING OR BORING. CONTRACTOR SHALL BE RESPONSIBLE FOR EXPOSING POTENTIAL UTILITY CONFLICTS FAR ENOUGH AHEAD OF CONSTRUCTION TO MAKE NECESSARY GRADE MODIFICATIONS WITHOUT DELAYING THE WORK. IF GRADE MODIFICATION IS NECESSARY, CONTRACTOR SHALL NOTIFY THE DESIGN ENGINEER, AND THE DESIGN ENGINEER SHALL OBTAIN APPROVAL FROM THE CITY ENGINEER PRIOR TO CONSTRUCTION. ALL UTILITY CROSSINGS SHALL BE POTHOLED AS NECESSARY PRIOR TO EXCAVATING OR BORING TO ALLOW THE CONTRACTOR TO PREVENT GRADE OR ALIGNMENT CONFLICTS.
5. ALL EXISTING FACILITIES SHALL BE MAINTAINED IN-PLACE BY THE CONTRACTOR UNLESS OTHERWISE SHOWN OR DIRECTED. CONTRACTOR SHALL TAKE ALL PRECAUTIONS NECESSARY TO SUPPORT, MAINTAIN, OR OTHERWISE PROTECT EXISTING UTILITIES AND OTHER FACILITIES AT ALL TIMES DURING CONSTRUCTION. CONTRACTOR TO LEAVE EXISTING FACILITIES IN AN EQUAL OR BETTER-THAN-ORIGINAL CONDITION AND TO THE SATISFACTION OF THE CITY ENGINEER.
6. UTILITIES, OR INTERFERING PORTIONS OF UTILITIES, THAT ARE ABANDONED IN PLACE SHALL BE REMOVED BY THE CONTRACTOR TO THE EXTENT NECESSARY TO ACCOMPLISH THE WORK. THE CONTRACTOR SHALL PLUG THE REMAINING EXPOSED ENDS OF ABANDONED UTILITIES.
7. CONTRACTOR SHALL REMOVE ALL EXISTING SIGNS, MAILBOXES, FENCES, LANDSCAPING, ETC., AS REQUIRED TO AVOID DAMAGE DURING CONSTRUCTION AND REPLACE THEM TO EXISTING OR BETTER CONDITION.
8. ANY SEPTIC TANKS ENCOUNTERED DURING CONSTRUCTION SHALL BE PUMPED OUT. CONTRACTOR SHALL BREAK BOTTOM OF TANK OUT AND BACKFILL WITH PEA GRAVEL UNLESS OTHERWISE REQUIRED BY PUBLIC AGENCIES HAVING JURISDICTION. SEPTIC TANK REMOVAL TO BE IN ACCORDANCE WITH COUNTY SANITARIAN REQUIREMENTS.
9. ANY WELLS ENCOUNTERED SHALL BE ABANDONED PER STATE OF OREGON WATER RESOURCES DEPARTMENT REQUIREMENTS.
10. ANY FUEL TANKS ENCOUNTERED SHALL BE REMOVED AND DISPOSED OF PER STATE OF OREGON DEQ REQUIREMENTS. BACKFILL WITH COMPACTED GRANULAR MATERIAL.

GRADING, PAVING, + DRAINAGE NOTES

1. THE CONTRACTOR SHALL BE RESPONSIBLE FOR MANAGING CONSTRUCTION ACTIVITIES TO INSURE THAT PUBLIC STREETS AND RIGHT-OF-WAYS ARE KEPT CLEAN OF MUD, DUST OR DEBRIS. DUST ABATEMENT SHALL BE MAINTAINED BY ADEQUATE WATERING OF THE SITE BY THE CONTRACTOR.
2. UNLESS OTHERWISE NOTED, ALL GRADING, ROCKING AND PAVING TO CONFORM TO OSSC (ODOT/APWA) SPECIFICATIONS, MOST CURRENT EDITION.
3. CLEAR AND GRUB WITHIN WORK LIMITS ALL SURFACE VEGETATION, TREES, STUMPS, BRUSH, ROOTS, ETC. DO NOT DAMAGE OR REMOVE TREES EXCEPT AS APPROVED BY THE ENGINEER OR AS SHOWN ON THE DRAWINGS. PROTECT ALL ROOTS TWO INCHES IN DIAMETER OR LARGER.
4. STRIP WORK LIMITS, REMOVING ALL ORGANIC MATTER WHICH CANNOT BE COMPACTED INTO A STABLE MASS. ALL TREES, BRUSH AND DEBRIS ASSOCIATED WITH CLEARING, STRIPPING OR GRADING SHALL BE REMOVED AND DISPOSED OF OFF-SITE.
5. IMMEDIATELY FOLLOWING FINE GRADING OPERATIONS, COMPACT SUBGRADE TO 95% OF THE MAXIMUM DRY DENSITY PER AASHTO T-180 TEST METHOD (MODIFIED PROCTOR). SUBGRADE MUST BE INSPECTED AND APPROVED BY THE CITY PRIOR TO PLACING EMBANKMENTS OR BASE ROCK.
6. ENGINEERED FILLS SHALL BE CONSTRUCTED AND COMPACTED IN 6" LIFTS OVER APPROVED SUBGRADE. ALL FILLS WITHIN PUBLIC RIGHT-OF-WAYS AND EASEMENTS SHALL BE ENGINEERED, WITH EACH LIFT COMPACTED TO 95% OF THE MAXIMUM DRY DENSITY PER AASHTO T-180 TEST METHOD (MODIFIED PROCTOR).
7. ALL FILLS OUTSIDE OF PUBLIC RIGHT-OF-WAYS WHICH ARE WITHIN POTENTIAL BUILDING ENVELOPES SHALL BE ENGINEERED AND COMPLY WITH THE OREGON STRUCTURAL SPECIALTY CODE, WITH EACH LIFT COMPACTED TO 90% OF THE MAXIMUM DRY DENSITY PER AASHTO T-180 TEST METHOD (MODIFIED PROCTOR). FILLS OUTSIDE OF BUILDING ENVELOPES WHICH ARE OVER 12-INCHES IN DEPTH SHALL ALSO BE ENGINEERED AND COMPACTED.
8. UNLESS OTHERWISE SHOWN ON THE DRAWINGS, STRAIGHT GRADES SHALL BE RUN BETWEEN ALL FINISH GRADE ELEVATIONS AND/OR FINISH CONTOUR LINES SHOWN. FINISH PAVEMENT GRADES AT TRANSITION TO EXISTING PAVEMENT SHALL MATCH EXISTING PAVEMENT GRADES OR BE FEATHERED PAST JOINTS WITH EXISTING PAVEMENT AS REQUIRED TO PROVIDE A SMOOTH, FREE DRAINING SURFACE.
9. CRUSHED ROCK SHALL CONFORM TO THE REQUIREMENTS OF OSSC (ODOT/APWA) 02630.10 (DENSE GRADED BASE AGGREGATE), WITH NO MORE THAN 10% PASSING THE #40 SIEVE AND NO MORE THAN 5% PASSING THE #200 SIEVE. COMPACT TO 95% OF THE MAXIMUM DRY DENSITY PER AASHTO T-180 TEST METHOD (MODIFIED PROCTOR). PRIOR TO PLACING AC PAVEMENT, WRITTEN COMPACTION TEST RESULTS FOR BASEROCK AND TRENCH BACKFILL MUST BE RECEIVED BY THE CITY, AND A PROOF-ROLL (WITNESSED BY THE CITY) MUST BE PERFORMED.
10. PAVING OF STREETS SHALL NOT BE ALLOWED UNTIL AFTER COMPLETION OF ALL REQUIRED TESTING AND INSPECTION OF NEW WATER, SEWER AND STORM DRAIN LINES UNDER PAVED AREAS, AND REVIEW AND APPROVAL OF THE PRIVATE (FRANCHISE) UTILITY PLANS BY THE CITY ENGINEER.
11. A.C. PAVEMENT SHALL CONFORM TO OSSC (ODOT/APWA) 00744 (MINOR HOT MIXED ASPHALT CONCRETE (HMAC) PAVEMENTS) FOR STANDARD DUTY MIX AND ODOT 00745 FOR WMAC IN PUBLIC ROW. AC PAVEMENT SHALL BE COMPACTED TO A MINIMUM OF 92% OF MAXIMUM DENSITY (AT ALL LOCATIONS) AS DETERMINED BY THE RICE STANDARD METHOD.
12. ALL EXISTING OR CONSTRUCTED MANHOLES, CLEANOUTS, MONUMENTS, GAS VALVES, WATER VALVES AND SIMILAR STRUCTURES SHALL BE ADJUSTED TO MATCH FINISH GRADE OF THE PAVEMENT, SIDEWALK, LANDSCAPED AREA OR MEDIAN STRIP WHEREIN THEY LIE.
13. UNLESS OTHERWISE SHOWN ON THE DRAWINGS, NO CUT OR FILL SLOPES SHALL BE CONSTRUCTED STEEPER THAN 2H:1V.
14. ALL PLANTER AREAS SHALL BE BACKFILLED WITH APPROVED TOP SOIL MINIMUM 8" THICK. STRIPPING MATERIALS SHALL NOT BE USED FOR PLANTER BACKFILL.
15. CONTRACTOR SHALL HYDROSEED ALL EXPOSED SLOPES AND DISTURBED AREAS WHICH ARE NOT SCHEDULED TO BE LANDSCAPED.
16. GRADING SHOWN ON THE DRAWINGS IS CRITICAL TO FUNCTIONING OF DRAINAGE SYSTEM AND SHALL BE STRICTLY FOLLOWED.
17. CONTRACTOR SHALL COORDINATE AND ENSURE THAT DETENTION POND VOLUMES ARE INSPECTED AND APPROVED BY PUBLIC AGENCIES HAVING JURISDICTION PRIOR TO PAVING AND LANDSCAPING.

PIPED UTILITIES

1. CONTRACTOR SHALL COORDINATE AND PAY ALL COSTS ASSOCIATED WITH CONNECTING TO EXISTING WATER, SANITARY SEWER AND STORM SEWER FACILITIES.
2. UNLESS OTHERWISE NOTED, MATERIALS AND WORKMANSHIP FOR PRIVATE WATER, SANITARY SEWER AND STORM SEWER SHALL CONFORM TO THE MOST CURRENT OSSC (ODOT/APWA) SPECIFICATIONS.
3. BEDDING AND BACKFILL. ALL PIPES SHALL BE BEDDED WITH MINIMUM 6-INCHES OF 3/4" MINUS CRUSHED ROCK BEDDING AND BACKFILLED WITH COMPACTED 3/4" MINUS CRUSHED ROCK IN THE PIPE ZONE (CRUSHED ROCK SHALL EXTEND A MINIMUM OF 12-INCHES OVER THE TOP OF THE PIPE IN ALL CASES). CRUSHED ROCK TRENCH BACKFILL SHALL BE USED UNDER ALL IMPROVED AREAS, INCLUDING SIDEWALKS. GRANULAR TRENCH BACKFILL SHALL BE COMPACTED TO 95% OF THE MAXIMUM DRY DENSITY PER AASHTO T-180 TEST METHOD (MODIFIED PROCTOR).
4. THE CONTRACTOR SHALL HAVE APPROPRIATE EQUIPMENT ON SITE TO PRODUCE A FIRM, SMOOTH, UNDISTURBED SUBGRADE AT THE TRENCH BOTTOM, TRUE TO GRADE. THE BOTTOM OF THE TRENCH EXCAVATION SHALL BE SHALL BE SMOOTH, FREE OF LOOSE MATERIALS OR TOOTH GROOVES FOR THE ENTIRE WIDTH OF THE TRENCH PRIOR TO PLACING THE GRANULAR BEDDING MATERIAL.
5. CONTRACTOR SHALL ARRANGE FOR AND PAY ALL COSTS TO ABANDON EXISTING SEWER AND WATER SERVICES NOT SCHEDULED TO REMAIN IN SERVICE.
6. ALL PIPED UTILITIES ABANDONED IN PLACE SHALL HAVE ALL OPENINGS CLOSED WITH CONCRETE PLUGS WITH A MINIMUM LENGTH EQUAL TO 2 TIMES THE DIAMETER OF THE ABANDONED PIPE.
7. THE END OF ALL UTILITY STUBS SHALL BE MARKED WITH A 2-X-4, EXTENDING 2 FEET MINIMUM ABOVE FINISH GRADE, PAINTED WHITE AND WIRED TO PIPE STUB (PAINTED WHITE FOR SANITARY SEWER, GREEN FOR STORM). TYPE OF UTILITY (IE. SEWER, STORM, ETC) AND DEPTH BELOW GRADE TO PIPE INVERT SHALL BE CLEARLY AND PERMANENTLY LABELED ON THE MARKER POST.
8. CONTRACTOR SHALL PROVIDE ALL MATERIALS, EQUIPMENT AND FACILITIES REQUIRED FOR TESTING ALL UTILITY PIPING IN ACCORDANCE WITH CITY CONSTRUCTION SPECIFICATIONS.
9. TRACER WIRE. ALL NON-METALLIC WATER, SANITARY AND STORM SEWER PIPING LOCATED OUTSIDE OF THE PUBLIC RIGHT-OF-WAY OR NOT LAID IN STRAIGHT LINES BETWEEN STRUCTURES SHALL HAVE AN ELECTRICALLY CONDUCTIVE INSULATED 12 GAUGE SOLID CORE COPPER TRACER WIRE THE FULL LENGTH OF THE INSTALLED PIPE USING BLUE WIRE FOR WATER AND GREEN FOR STORM AND SANITARY PIPING. TRACER WIRE SHALL BE EXTENDED UP INTO ALL VALVE BOXES, AND MANHOLES AND CATCH BASINS. TRACER WIRE PENETRATIONS INTO MANHOLES SHALL BE WITHIN 18 INCHES OF THE RIM ELEVATION AND ADJACENT TO MANHOLE STEPS. THE TRACER WIRE SHALL BE TIED TO THE TOP MANHOLE STEP OR OTHERWISE SUPPORTED TO ALLOW RETRIEVAL FROM THE OUTSIDE OF THE MANHOLE OR CATCH BASIN. ALL TRACER WIRE SPLICES SHALL BE MADE WITH WATERPROOF SPLICES OR WATERPROOF/CORROSION RESISTANT WIRE NUTS.
10. WARNING TAPE. DETECTABLE OR NON-DETECTABLE ACID AND ALKALI RESISTANT SAFETY WARNING TAPE SHALL BE PROVIDED ALONG THE FULL LENGTH OF ALL SANITARY SEWER AND STORM DRAIN SERVICE LATERALS AND ALONG ALL WATER, SANITARY SEWER AND STORM DRAIN MAINLINE SEGMENTS NOT LOCATED UNDER SIDEWALKS OR PAVED PORTIONS OF PUBLIC STREETS. UNDERGROUND WARNING TAPE SHALL BE CONTINUOUS THE ENTIRE LENGTH OF SERVICE LATERALS INSTALLED FROM THE MAINLINE TO THE BACK OF THE PUE.
11. NO TRENCHES IN ROADS OR DRIVEWAYS SHALL BE LEFT IN AN OPEN CONDITION OVERNIGHT. ALL SUCH TRENCHES SHALL BE CLOSED BEFORE THE END OF EACH WORK DAY AND NORMAL TRAFFIC FLOWS RESTORED.
12. BEFORE MANDREL TESTING, TV INSPECTION OR FINAL ACCEPTANCE OF GRAVITY PIPELINES, ALL TRENCH COMPACTION SHALL BE COMPLETED AND ALL SEWERS AND STORM DRAINS FLUSHED & CLEANED TO REMOVE ALL MUD, DEBRIS & FOREIGN MATERIAL FROM THE PIPELINES, MANHOLES AND/OR CATCH BASINS.
13. CITY FORCES TO OPERATE ALL VALVES, INCLUDING FIRE HYDRANTS, ON EXISTING PUBLIC MAINS.

WATER LINES

1. ALL WATER MAINS SHALL BE CLASS 52 DUCTILE IRON. ALL FITTINGS 4-INCHES THROUGH 24-INCHES IN DIAMETER SHALL BE DUCTILE IRON FITTINGS IN CONFORMANCE WITH AWWA C-153 OR AWWA C-110. THE MINIMUM WORKING PRESSURE FOR ALL MJ CAST IRON OR DUCTILE IRON FITTINGS 4-INCHES THROUGH 24-INCH IN DIAMETER SHALL BE 350 PSI FOR MJ FITTINGS AND 250 PSI FOR FLANGED FITTINGS.
2. ALL WATER MAINS TO BE INSTALLED WITH A MINIMUM 36 INCH COVER TO FINISH GRADE UNLESS OTHERWISE NOTED OR DIRECTED. SERVICE LINES TO BE INSTALLED WITH A MINIMUM 36 INCHES COVER WITHIN THE RIGHT-OF-WAY. DEEPER DEPTHS MAY BE REQUIRED AS SHOWN ON THE DRAWINGS OR TO AVOID OBSTRUCTIONS.
3. WATER SERVICE LINES SIZED 1" SHALL BE MUNICIPEX MEETING ASTM F876 & F2788. 2" SERVICE LINES SHALL BE TYPE K HARD COPPER.
4. UNLESS OTHERWISE NOTED, WATER SERVICE PIPE ON THE PRIVATE SIDE OF THE METER SHALL BE MUNICIPEX MEETING ASTM F876 & F2788.
5. DOMESTIC AND FIRE BACKFLOW PREVENTION DEVICES AND VAULTS SHALL CONFORM TO REQUIREMENTS OF PUBLIC AND/OR PRIVATE AGENCIES HAVING JURISDICTION. BACKFLOW DEVICES SHALL BE TESTED UPON INSTALLATION AND TEST RESULTS SUBMITTED WITHIN 10 DAYS OF THE TEST.
6. CONTRACTOR SHALL INSTALL TEMPORARY PLUG AND BLOWOFF AS REQUIRED AT THE END OF WATERLINE FOR FLUSHING, TESTING AND CHLORINATION.
7. THE WORK SHALL BE PERFORMED IN A MANNER DESIGNATED TO MAINTAIN WATER SERVICE TO BUILDINGS SUPPLIED FROM THE EXISTING WATERLINES. IN NO CASE SHALL SERVICE TO ANY MAIN LINE OR BUILDING BE INTERRUPTED FORM MORE THAN FOUR (4) HOURS IN ANY ONE DAY. CONTRACTOR SHALL NOTIFY CITY OF ROCKAWAY BEACH AND ALL AFFECTED RESIDENTS AND BUSINESSES A MINIMUM OF 24 BUSINESS HOURS (1 BUSINESS DAY) PRIOR TO ANY INTERRUPTION OF SERVICE.
8. SANITARY SEWER & WATERLINE CROSSINGS. WHERE NEW WATERLINES CROSS BELOW OR WITHIN 18-INCHES VERTICAL SEPARATION ABOVE A SEWER MAIN OR SEWER SERVICE LATERAL, CENTER ONE FULL LENGTH OF WATERLINE PIPE AT POINT OF CROSSING THE SEWER LINE OR SEWER LATERAL. UNLESS OTHERWISE APPROVED IN WRITING BY THE PUBLIC WORKS DIRECTOR, EXISTING SEWER MAINS AND/OR SERVICE LATERALS WITHIN THIS ZONE SHALL BE REPLACED WITH A FULL LENGTH OF NEW PIPE (D2241 PVC-DR 32.5, C-900 PVC-DR 18 OR CL 50 DUCTILE IRON), CENTERED AT THE CROSSING IN ACCORDANCE WITH OAR 333-061 AND LOCAL JURISDICTION REQUIREMENTS. CONNECT TO EXISTING SEWER LINES WITH APPROVED RUBBER COUPLINGS. EXAMPLE: FOR AN 8-INCH WATERLINE WITH 36-INCHES COVER, 4-INCH SERVICE LATERAL INVERTS WITHIN 5.67-FEET (68-INCHES) OF FINISH GRADE MUST HAVE THIS PIPE CENTERED AT THE CROSSING.
9. PRESSURE TESTING. ALL WATERLINES, SERVICES AND APPURTENANCES SHALL BE PRESSURE TESTED FOR LEAKAGE. CITY OF ROCKAWAY BEACH SHALL PERFORM THE PRESSURE TEST FOR PUBLIC ROW AND THE CONTRACTOR SHALL BE RESPONSIBLE FOR TESTING ON THE PRIVATE SIDE.
10. CLEANING & FLUSHING. PRIOR TO THE PRESSURE TEST AND DISINFECTING, THE WATER LINES SHALL BE THOROUGHLY FLUSHED THROUGH HYDRANTS, BLOW OFFS OR BY OTHER APPROVED MEANS. CITY OF ROCKAWAY BEACH SHALL DO THIS ON THE PUBLIC FACILITIES AND THE CONTRACTOR SHALL BE RESPONSIBLE FOR THE PRIVATE SIDE.
11. DISINFECTION & BACTERIOLOGICAL TESTING. CITY OF ROCKAWAY BEACH SHALL PERFORM THE CHLORINATION TEST AS WELL AS PULL SAMPLES FOR AN INDEPENDENT LAB TEST FOR THE PUBLIC WATER SYSTEM. CONTRACTOR SHALL BE RESPONSIBLE FOR TESTING ON THE PRIVATE SIDE.
12. ALL WATER MAINS AND SERVICE LINES SHALL BE CHLORINE DISINFECTED PER LOCAL JURISDICTION REQUIREMENTS, AWWA C-651 OR OAR 333-061, WHICHEVER IS MORE STRINGENT. FOLLOWING CHLORINATION, ALL TREATED WATER SHALL BE FLUSHED FROM THE LINES AT THEIR EXTREMITIES AND BACTERIOLOGICALLY TESTED PER LOCAL AND STATE STANDARDS. CONTRACTOR TO PAY FOR LABORATORY ANALYSIS OF WATER SAMPLES TAKEN. SHOULD THE INITIAL TREATMENT PROVE INEFFECTIVE, THE CHLORINATION SHALL BE REPEATED UNTIL CONFIRMED TESTS SHOW ACCEPTABLE RESULTS.
13. DISINFECTION OF CONNECTIONS. FOR CONNECTIONS WHICH CANNOT BE DISINFECTED WITH THE WATERLINE MAINLINES AS NOTED ABOVE, ALL FITTINGS, VALVES AND APPURTENANCES, INCLUDING TOOL SURFACES WHICH WILL COME IN CONTACT WITH POTABLE WATER, SHALL BE THOROUGHLY CLEANED BY WASHING WITH POTABLE WATER AND THEN SWABBED OR SPRAYED WITH A ONE PERCENT (1%) HYPOCHLORITE SOLUTION (10,000 MG/L) IN ACCORDANCE WITH THE REQUIREMENTS OF AWWA C-651 AND OAR 333-061.

FRANCHISE UTILITIES

1. UNLESS OTHERWISE SHOWN ON THE DRAWINGS AND APPROVED IN WRITING BY ALL JURISDICTIONS HAVING AUTHORITY, NEW AND RELOCATED PRIVATE UTILITIES SHALL BE INSTALLED UNDERGROUND IN CONJUNCTION WITH THE DEVELOPMENT.
2. CONTRACTOR SHALL COORDINATE WITH TILLAMOOK PUBLIC UTILITY DISTRICT FOR LOCATION OF CONDUITS IN COMMON TRENCHES, AS WELL AS LOCATION OF VAULTS, PEDESTALS, ETC. THE CONTRACTOR SHALL BE RESPONSIBLE FOR PROVIDING FRANCHISE UTILITY COMPANIES ADEQUATE WRITTEN NOTICE OF AVAILABILITY OF THE OPEN TRENCH (TYPICALLY 10 DAYS MINIMUM), AND REASONABLE ACCESS TO THE OPEN TRENCH. UNLESS OTHERWISE APPROVED IN WRITING BY THE CITY, ALL ABOVE-GRADE FACILITIES SHALL BE LOCATED IN PUES (WHERE PUES EXIST OR WILL BE GRANTED BY THE DEVELOPMENT), AND OTHERWISE SHALL BE PLACED IN A LOCATION OUTSIDE THE PROPOSED SIDEWALK LOCATION.
3. INSTALLATION OF PRIVATE UTILITIES IN A COMMON TRENCH WITH OR WITHIN 3 FEET HORIZONTALLY OF AND PARALLELING PUBLIC WATER, SANITARY SEWER OR STORM DRAINS IS PROHIBITED.
4. POWER TRENCHING AND CONDUITS SHALL BE INSTALLED PER UTILITY COMPANY REQUIREMENTS WITH PULL WIRE. CONTRACTOR SHALL VERIFY WITH UTILITY COMPANY FOR SIZE, LOCATION AND TYPE OF CONDUIT PRIOR TO CONSTRUCTION, AND SHALL ENSURE THAT TRENCHES ARE ADEQUATELY PREPARED FOR INSTALLATION PER UTILITY COMPANY REQUIREMENTS. ALL CHANGES IN DIRECTION OF UTILITY CONDUIT RUNS SHALL HAVE LONG RADIUS STEEL BENDS.
5. CONTRACTOR SHALL NOTIFY AND COORDINATE WITH PRIVATE UTILITIES FOR RELOCATION OF POWER POLES, VAULTS, ETC. TO AVOID CONFLICT WITH CITY UTILITY STRUCTURES, FIRE HYDRANTS, METERS, SEWER OR STORM LATERALS, ETC."

TESTING REQUIREMENTS

1. THE CONTRACTOR SHALL BE RESPONSIBLE TO ENSURE THAT ALL REQUIRED OR NECESSARY INSPECTIONS ARE COMPLETED BY AUTHORIZED INSPECTORS PRIOR TO PROCEEDING WITH SUBSEQUENT WORK WHICH COVERS OR THAT IS DEPENDENT ON THE WORK TO BE INSPECTED. FAILURE TO OBTAIN NECESSARY INSPECTION(S) AND APPROVAL(S) SHALL RESULT IN THE CONTRACTOR BEING FULLY RESPONSIBLE FOR ALL PROBLEMS AND/OR CORRECTIVE MEASURES ARISING FROM UNINSPECTED WORK.

STORM DRAINS

1. STORM DRAIN PIPE MATERIALS SHALL CONFORM TO THE CONSTRUCTION DRAWINGS AND CITY REQUIREMENTS. CONTRACTOR SHALL USE UNIFORM PIPE MATERIAL ON EACH PIPE RUN BETWEEN STRUCTURES UNLESS OTHERWISE DIRECTED OR APPROVED. JOINTED HDPE PIPE SHALL NOT BE USED FOR SLOPES EXCEEDING TEN PERCENT (10%) OR IN THE PUBLIC ROW.
2. CATCH BASINS AND JUNCTION BOXES SHALL BE SET SQUARE WITH BUILDINGS OR WITH THE EDGE OF THE PARKING LOT OR STREET WHEREIN THEY LIE. STORM DRAIN INLET STRUCTURES AND PAVING SHALL BE ADJUSTED SO WATER FLOWS INTO THE STRUCTURE WITHOUT PONDING WATER.
3. UNLESS OTHERWISE APPROVED BY THE CITY ENGINEER, ALL STORM DRAIN CONNECTIONS SHALL BE BY MANUFACTURED TEES OR SADDLES.
4. SWEEP (DEFLECT) STORM DRAIN PIPE INTO CATCH BASINS AND MANHOLES AS REQUIRED. MAXIMUM JOINT DEFLECTION SHALL NOT EXCEED 5 DEGREES OR MANUFACTURERS RECOMMENDATIONS, WHICHEVER IS LESS.
5. UNLESS OTHERWISE SPECIFIED OR DIRECTED, INSTALL STORM DRAIN PIPE IN ACCORDANCE WITH MANUFACTURER'S INSTALLATION GUIDELINES.
6. CLEANING. PRIOR TO MANDREL TESTING OR FINAL ACCEPTANCE, FLUSH AND CLEAN ALL SEWERS, AND REMOVE ALL FOREIGN MATERIAL FROM THE MAINLINES, MANHOLES AND CATCH BASINS.
7. MANDREL TESTING. CONTRACTOR SHALL CONDUCT DEFLECTION TEST OF FLEXIBLE STORM SEWER PIPES BY PULLING AN APPROVED MANDREL THROUGH THE COMPLETED PIPE LINE FOLLOWING TRENCH COMPACTION. THE DIAMETER OF THE MANDREL SHALL BE 95% OF THE INITIAL PIPE DIAMETER. TEST SHALL BE CONDUCTED NOT MORE THAN 30 DAYS AFTER THE TRENCH BACKFILLING AND COMPACTION HAS BEEN COMPLETED.

REGISTERED PROFESSIONAL ENGINEER 93365PE
Matthew Del Moro, PE
OREGON JULY 10, 2018 MATTHEW C. DEL MORO
EXPIRES 12/31/2025

H B H CONSULTING ENGINEERS
501 E First Street
Newberg, Oregon 97132
503/554-9553 ■ fax 503/537-9554
email: mail@hbh-consulting.com

REV.	DATE	DESCRIPTION	BY

Designed By: ZHH | Drawn By: JCA | Checked By: MCD | Submittal No: BID SET

File: L:\2025-005.01\14-Design\DWG\NOTES.dwg

0" 1"
IF THIS LINE IS NOT 1 INCH SCALE IS NOT AS SHOWN

CITY OF ROCKAWAY BEACH
PO BOX 5, ROCKAWAY BEACH, OR. 97136

N PACIFIC ST IMPROVEMENTS PROJECT
ROCKAWAY BEACH
NOTES

Sheet No. C-2
Date 7/17/2025
2 of 14

2025-005.01

REV.	DATE	DESCRIPTION	BY

H B H
CONSULTING ENGINEERS
501 E First Street
Newberg, Oregon 97132
email: mail@hbh-consulting.com
fax 503/537-9554
503/554-9553

Designed By: ZHH | Drawn By: JCA | Checked By: MCD | Submittal No: BID SET

File:L:\2025-005.01\4-Design\DWG\EXISTING CONDITIONS_.dwg

0" 1" IF THE LINE IS NOT 1 INCH THEN THE DRAWING IS NOT TO SCALE IN REF. TO SECTION

CITY OF ROCKAWAY BEACH
PO BOX 5, ROCKAWAY BEACH, OR. 97136

N PACIFIC ST IMPROVEMENTS PROJECT
ROCKAWAY BEACH

EXISTING CONDITIONS 1

Date 7/17/2025 | Sheet No. C-3 | 3 of 14 | 2025-005.01

NOTES

THIS MAP DOES NOT CONSTITUTE A RIGHT-OF-WAY SURVEY OF THE STREETS SHOWN HEREON. THE RIGHT-OF-WAYS AND TAX LOT BOUNDARIES SHOWN HEREON WERE LAID OUT FROM LOCAL MONUMENTS AND SUBDIVISION CONTROL. THE COORDINATES FOR THIS MAP ARE BASED ON OREGON STATE PLANE COORDINATES, OREGON NORTH ZONE PER ODOT ORGN NETWORK. THE PURPOSE OF THIS MAP IS TO SHOW TOPOGRAPHIC FEATURES WITHIN THE PORTIONS OF THE RIGHT-OF-WAYS SHOWN ON THIS MAP. THE UNDERGROUND WATER, TELEPHONE AND POWER LINES SHOWN HEREON ARE BASED UPON ABOVE GROUND FEATURES, ASBUILTS AND UTILITY LOCATE PAINT MARKS PLACED BY THE CORRESPONDING UTILITY COMPANIES. SAID UTILITY COMPANIES DO NOT GUARANTEE THEIR LOCATES TO BE FREE OF ERRORS OR OMISSIONS. THEREFORE, ONION PEAK DESIGN RESERVES THE SAME LIMITATIONS.
ELEVATIONS ON THIS MAP ARE NAVD 1988.

LEGEND

- INDICATES CONTROL POINT AS NOTED.
- INDICATES WATER METER.
- INDICATES TELEPHONE PEDESTAL.
- INDICATES POWER PEDESTAL.
- INDICATES POWER POLE.
- INDICATES GUY ANCHOR.
- INDICATES WATER VALVE.
- INDICATES FIRE HYDRANT.
- INDICATES SIGN.
- INDICATES TREE.
- INDICATES SANITARY SEWER MANHOLE.
- INDICATES STORM DRAIN MANHOLE.
- INDICATES SANITARY SEWER CLEAN OUT.
- —— x —— INDICATES FENCE.
- —— w —— INDICATES WATERLINE.
- —— ss —— INDICATES SANITARY SEWER LINE.
- —— sd —— INDICATES STORM DRAIN LINE.
- —— OH —— INDICATES OVERHEAD POWER LINE.
- —— P —— INDICATES UNDERGROUND POWER LINE.
- —— UG —— INDICATES FIBER OPTIC.
- — — — INDICATES OVERHEAD CABLE LINE.
- INDICATES EDGE OF ASPHALT.
- INDICATES EDGE OF GRAVEL.

CONTROL POINTS

POINT #	NORTH	EAST	ELEV.	DESC.
1	729083.90	7320927.53	24.31	MAG
3	729411.37	7320935.81	29.79	MAG
4	729735.64	7320991.75	26.82	MAG
5	730039.71	7320999.87	25.14	MAG
6	730483.59	7321073.25	26.71	MAG
7	730820.65	7321086.61	26.66	MAG
8	731144.16	7321144.52	26.95	MAG
9	731515.61	7321161.56	26.08	MAG
10	731788.61	7321190.90	25.26	MAG
11	732100.20	7321250.91	24.80	MAG
12	732422.96	7321281.52	24.56	MAG
17	731295.85	7321138.77	26.79	MAG
18	732393.45	7321532.11	21.14	MAG

STORM STRUCTURES

SDMH #1
RIM = 25.11'
12" INV (N) = 20.6'
12" OUT (W) = 20.3'

SDMH #2
RIM = 24.94'
12" INV (N) = 20.7'
12" OUT (E) = 20.5'

CB #1
RIM = 24.91'
SUMP = 19.7'
12" CPP (S) INV = 20.8'
12" CPP (W) INV = 20.7'

CB #2
RIM = 23.86'
SUMP = 20.1'
12" CPP (N) INV = 17.1'
12" CPP (S) INV = 17.1'

CB #3
RIM = 23.84'
SUMP = 20.8'
12" CPP (N) INV = 21.8'

CB #4
RIM = 25.12'
SUMP = 23.2
12" CPP (W) INV = 23.3'

CB #5
RIM = 26.60'
SUMP = 24.3'
12" CPP (W) INV = 24.4'
8" PVC (S) = 24.5'

CB #6
RIM = 26.28'
SUMP = 24.3'
8" PVC (N) INV = 24.6'
4" PVC (W) = 25.2'

CB #7
RIM = 23.94'
SUMP = 22.4'
8" PVC (W) INV = 22.8'

CB #8
RIM = 24.61'
SUMP = 20.3'
12" PVC (E) INV = 20.6'
12" PVC (S) INV = 20.5'

CB #9
RIM = 24.84'
SUMP = 20.3'
12" PVC (W) INV = 20.8'

CB #10
RIM = 26.22'
SUMP = 23.0'
12" PVC (W) INV = 23.3

SANITARY STRUCTURES

SSMH #1
RIM = 20.88'
INV IN (N) = 17.1'
INV OUT (S) = 17.0'

SSMH #2
RIM = 21.67'
INV IN (N) = 16.2'
INV OUT (S) = 16.1'
INV IN (NW) = 17.6'

SSMH #3
RIM = 25.91'
INV OUT (S) = 20.6'
INV IN (N) = 20.9'

SSMH #4
RIM = 25.30'
CL=19.8'
INV IN (N) = 19.8'
INV OUT (S) = 19.6'

SSMH #5
RIM = 24.38'
INV IN (N) = 19.8'
INV IN (NE) = 20.7'
INV OUT (S) = 19.6'

SSMH #6
RIM = 24.92'
INV IN (N) = 19.1'
INV OUT (S) = 18.8'

SSMH #8
RIM = 26.2'
INV OUT (NW) = 21.2'
INV IN (N) = 19.0'
INV IN (S) = 19.2'

SSMH #9
RIM = 25.1'
INV OUT (N) = 18.1'
INV IN (S) = 18.2'

SSMH #10
RIM = 26.6'
INV OUT (N) = 21.0'
INV IN (S) = 21.2'

SSMH #11
RIM = 26.1'
INV IN (NW) = 20.9'
INV OUT (S) = 20.4'

SSMH #12
RIM = 23.2'
INV IN (N) = 19.3'
INV OUT (S) = 19.2'

SSMH #13
RIM = 27.0'
INV IN (N) = 18.3'
INV OUT (E) = 18.1'
INV IN (S) = 18.7'

SSMH #14
RIM = 25.0'
INV OUT (E) = 18.8'
INV IN (SW) = 19.0'
INV IN (W) = 19.1'

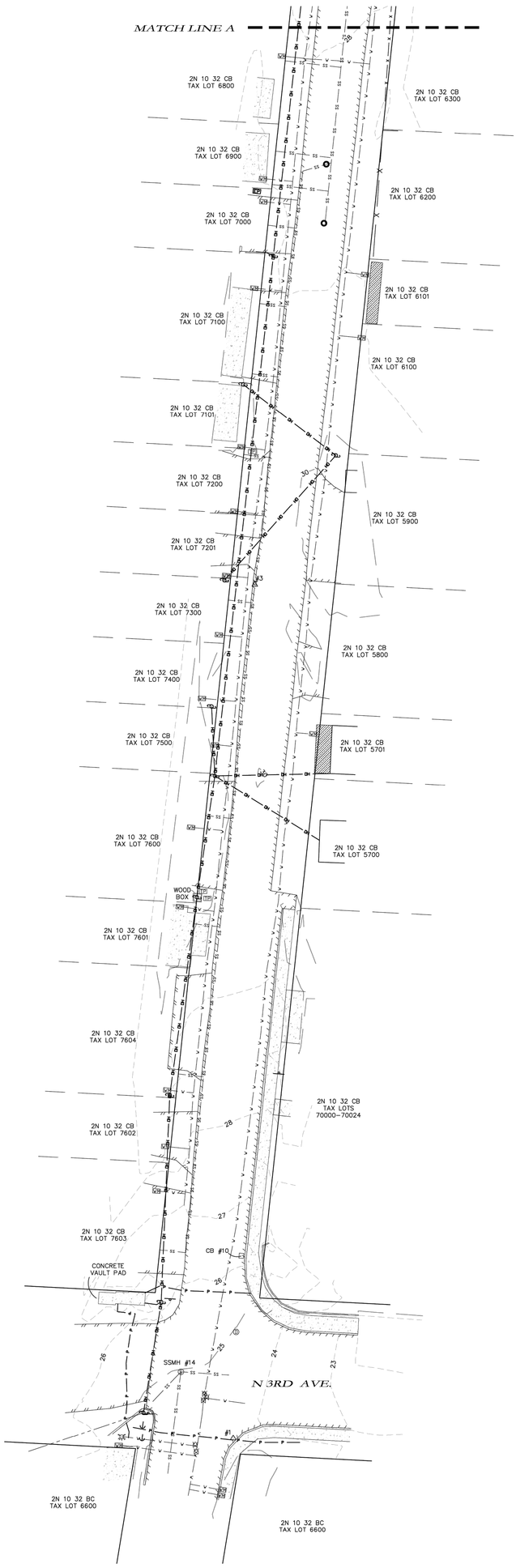

TOPOGRAPHIC SURVEY FOR:
HBH CONSULTING ENGINEERS, INC.
(CITY OF ROCKAWAY BEACH)
NORTH PACIFIC STREET
SECTION 32, T2N, R10W, W.M.
TILLAMOOK COUNTY
JUNE 27, 2025

GRAPHIC SCALE
20 0 10 20 40 80
(IN FEET)
1 inch = 20 ft.

REGISTERED PROFESSIONAL LAND SURVEYOR
Erick M White
OREGON
APRIL 28, 2014
ERICK M. WHITE
78572
RENEWS 6/30/2026

ONION PEAK DESIGN
11460 EVERGREEN WAY
NEHALEM, OR 97131
(503) 440-4403

"PACIFIC" #A2025
HBHPACIFIC2506-T.DWG

SHEET 1 OF 4

ONION PEAK DESIGN
11460 EVERGREEN WAY
NEHALEM, OR 97131
(503) 440-4403

"PACIFIC" #43025
HBHPACFI7206-1.DWG

TOPOGRAPHIC SURVEY FOR:
HBH CONSULTING ENGINEERS, INC.
(CITY OF ROCKAWAY BEACH)

NORTH PACIFIC STREET
SECTION 32, T2N, R10W, W.M.
TILLAMOOK COUNTY
JUNE 27, 2025

GRAPHIC SCALE
(IN FEET)
1 inch = 20 ft.

REGISTERED PROFESSIONAL LAND SURVEYOR
OREGON
APRIL 29, 2014
ERICK M. WHITE
78572
RENEWS 6/30/2026

SHEET 2 OF 4

H B H
CONSULTING ENGINEERS
501 E First Street
Newberg, Oregon 97132
503/554-9553 ■ fax 503/537-9554
email: mail@hbh-consulting.com

Designed By: ZHH | Drawn By: JCA | Checked By: MCD | Submittal No: BID SET
File: L:\2025-005.01\4-Design\DWG\EXISTING CONDITIONS_.dwg

REV.	DATE	DESCRIPTION	BY

0" 1"
IF THIS LINE IS NOT 1 INCH SCALE IS NOT AS SHOWN

CITY OF ROCKAWAY BEACH
PO BOX 5, ROCKAWAY BEACH, OR. 97136

N PACIFIC ST IMPROVEMENTS PROJECT
ROCKAWAY BEACH

EXISTING CONDITIONS 2

Sheet No. C-4
Date 7/17/2025
4 of 14
2025-005.01

TOPOGRAPHIC SURVEY FOR:
HBH CONSULTING ENGINEERS, INC.
(CITY OF ROCKAWAY BEACH)

NORTH PACIFIC STREET

SECTION 32, T2N, R10W, W.M.
TILLAMOOK COUNTY
JUNE 27, 2025

"PACIFIC" #43025
HBHPACIFIC2506-1.DWG

GRAPHIC SCALE
(IN FEET)
1 inch = 20 ft.

REGISTERED PROFESSIONAL LAND SURVEYOR
OREGON APRIL 29, 2014 ERICK M. WHITE 78572 RENEWS 6/30/2026

SHEET 3 OF 4

ONION PEAK DESIGN
11460 EVERGREEN WAY
NEHALEM, OR 97131
(503) 440-4403

H B H
501 E First Street
Newberg, Oregon 97132
CONSULTING 503/554-9553 ■ fax 503/537-9554
ENGINEERS email: mail@hbh-consulting.com

Designed By: ZHH | Drawn By: JCA | Checked By: MCD | Submittal No: BID SET

File: L:\2025-005.01\4-Design\DWG\EXISTING CONDITIONS_.dwg

REV.	DATE	DESCRIPTION	BY

0" 1"
IF THIS LINE IS NOT 1 INCH SCALE IS NOT AS SHOWN

CITY OF ROCKAWAY BEACH
PO BOX 5, ROCKAWAY BEACH, OR. 97136

N PACIFIC ST IMPROVEMENTS PROJECT
ROCKAWAY BEACH

EXISTING CONDITIONS 3

Sheet No. C-5
Date 7/17/2025
2025-005.01

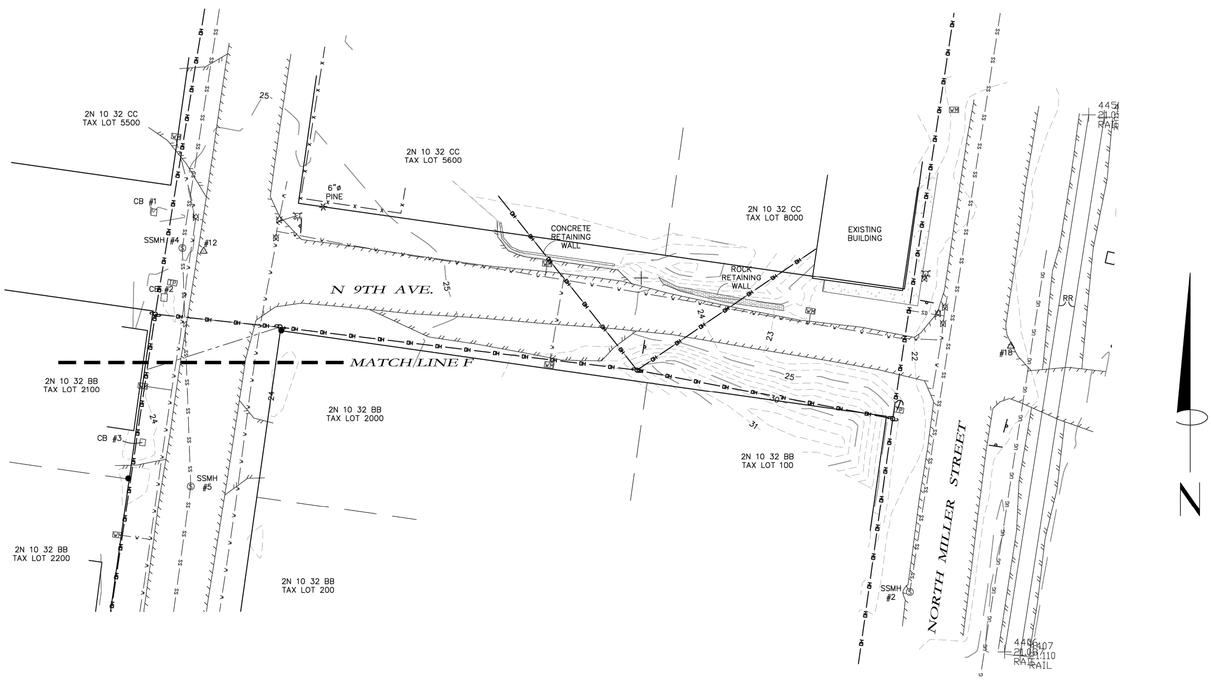

TOPOGRAPHIC SURVEY FOR:

HBH CONSULTING ENGINEERS, INC.
(CITY OF ROCKAWAY BEACH)

NORTH
PACIFIC
STREET

SECTION 32, T2N, R10W, W.M.
TILLAMOOK COUNTY
JUNE 27, 2025

GRAPHIC SCALE

20 0 10 20 40 80

(IN FEET)
1 inch = 20 ft.

REGISTERED
PROFESSIONAL
LAND SURVEYOR

Erick M White

OREGON
APRIL 28, 2014
ERICK M. WHITE
78572

RENEWS 6/30/2026

ONION PEAK DESIGN
11460 EVERGREEN WAY
NEHALEM, OR 97131
(503) 440-4403

"PACIFIC" #A2025
HBHPACIFIC2506-T.DWG

SHEET 4 OF 4

CITY OF ROCKAWAY BEACH
PO BOX 5, ROCKAWAY BEACH, OR. 97136

N PACIFIC ST IMPROVEMENTS PROJECT
ROCKAWAY BEACH

EXISTING CONDITIONS 4

IF THIS LINE IS NOT 1 INCH
THEN DRAWING IS NOT TO SCALE

REV.	DATE	DESCRIPTION	BY

H B H
CONSULTING ENGINEERS
501 E First Street
Newberg, Oregon 97132
503/554-9553 ■ fax 503/537-9554
email: mail@hbh-consulting.com

Designed By: ZHH | Drawn By: JCA | Checked By: MCD | Submittal No: BID SET

File:L:\2025-005.01\4-Design\DWG\EXISTING CONDITIONS_.dwg

Date 7/17/2025

Sheet No. C-6

6 of 14

2025-005.01

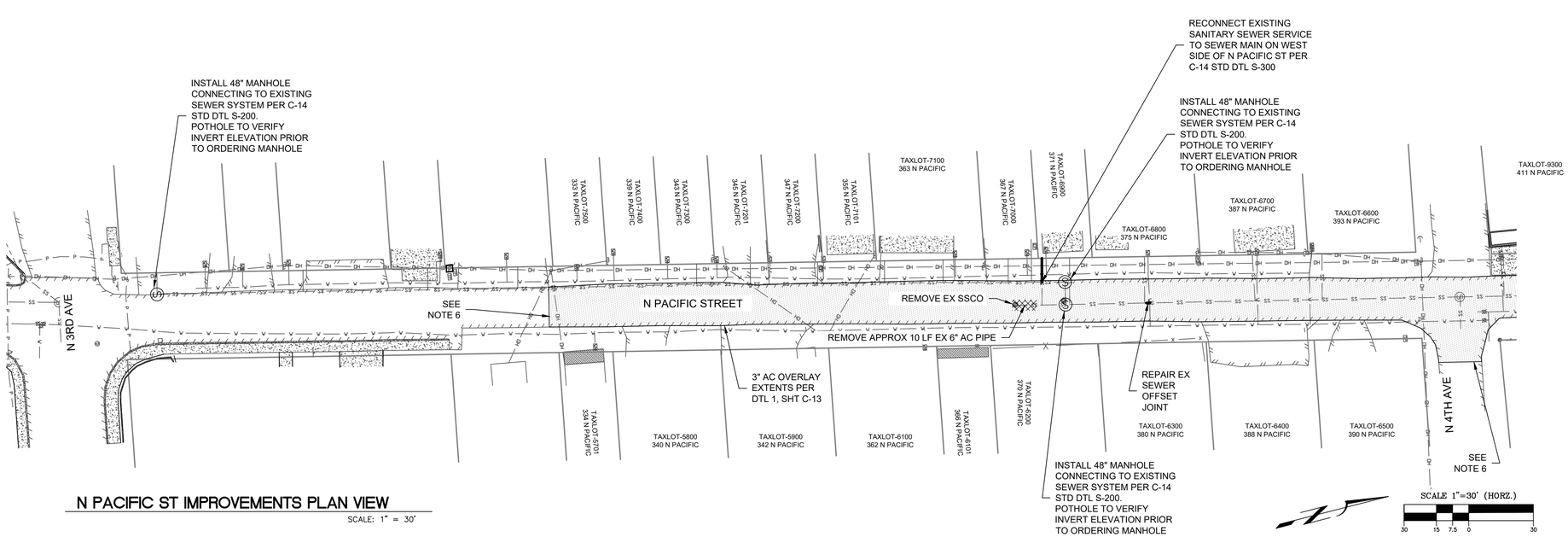

N PACIFIC ST IMPROVEMENTS PLAN VIEW

SCALE: 1" = 30'

NOTES

1. PROPOSED WATER MAIN SHALL BE 8" PVC C900 UNLESS OTHERWISE NOTED. OPEN TRENCH WATER MAIN WITH 36" MINIMUM COVER PER CITY STD DTL T-200, SHT C-14.
2. CONTRACTOR TO POTHOLE ALL CONNECTIONS TO EXISTING WATER PIPING PRIOR TO CONSTRUCTION TO VERIFY DEPTHS, SIZING & TYPE OF JOINT TO CONNECT TO. POTHOLE ALL EXISTING UTILITY CROSSINGS TO VERIFY DEPTH PRIOR TO CONSTRUCTION.
3. AFTER NEW WATER MAIN IS FLUSHED AND TESTED, MAKE NEW SERVICE CONNECTIONS FROM NEW WATER MAIN TO EXISTING METERS IN ACCORDANCE WITH CITY STD DTLS W-505, W-600 AND W-605 ON SHT C-13. WATER SERVICE CONNECTIONS SHALL BE FLUSHED AND TESTED AS WELL.
4. INSTALL FIRE HYDRANT ASSEMBLY PER CITY STD DTL W-300 ON SHT C-13
5. TAPER GRIND 10' TRANSITION TO EXISTING ASPHALT DRIVEWAY APRON
6. TAPER GRIND 20' TRANSITION TO EX ASPHALT ROADWAY.
7. MAINTAIN ACCESS TO ALL RESIDENCES DURING CONSTRUCTION AT ALL TIMES.
8. RESTRAIN ALL FITTINGS & VALVES. PROVIDE THRUST BLOCKING AT ALL BENDS.
9. SANITARY SEWER LATERAL LOCATIONS ARE ESTIMATED BASED OFF SURVEYED SANITARY CLEANOUT LOCATIONS. CONTRACTOR TO VERIFY SANITARY SEWER LATERAL DEPTHS AND LOCATIONS.
10. MAINTAIN MINIMUM 18" VERTICAL SEPARATION AT ALL SANITARY SEWER CROSSINGS. IF 18" SEPARATION IS NOT POSSIBLE, BACKFILL TRENCH WITH CONTROLLED DENSITY FILL (CDF) PER DTL 6, SHT C-12 AND SECTIONS 02320 AND 02510 OF THE SPECIFICATIONS, AND CENTER A STICK OF PROPOSED WATER PIPE AT THE CROSSING.
11. MANHOLE LIDS, VALVE CANS AND OTHER SUCH STRUCTURES SHALL HAVE BEEN COMPLETED, ADJUSTED, CURED AND OTHERWISE PREPARED, AS APPLICABLE AND MADE CLEAN AND READY FOR ASPHALT PLACEMENT.

REGISTERED PROFESSIONAL ENGINEER 93836PE OREGON JULY 10, 2018 MATTHEW C. DEL MORO

Matthew Del Moro, PE

EXPIRES 12/31/2025

H B H CONSULTING ENGINEERS
501 E First Street
Newberg, Oregon 97132
503/554-9553 ■ fax 503/537-9554
email: mail@hbh-consulting.com

Designed By: ZHH	Drawn By: JCA	Checked By: MCD	Submittal No: BID SET

File: L:\2025-005.01\4-Design\DWG\WATER LINE IMPROVEMENTS.dwg

REV.	DATE	DESCRIPTION	BY

0" 1"
IF THIS LINE IS NOT 1 INCH SCALE IS NOT AS SHOWN

CITY OF ROCKAWAY BEACH
PO BOX 55, ROCKAWAY BEACH, ORE. 97136

N PACIFIC ST IMPROVEMENTS PROJECT
ROCKAWAY BEACH

PROPOSED IMPROVEMENTS
3RD ST TO 4TH ST

Sheet No. C-7 of 14

Date 7/22/2025

2025-005.01

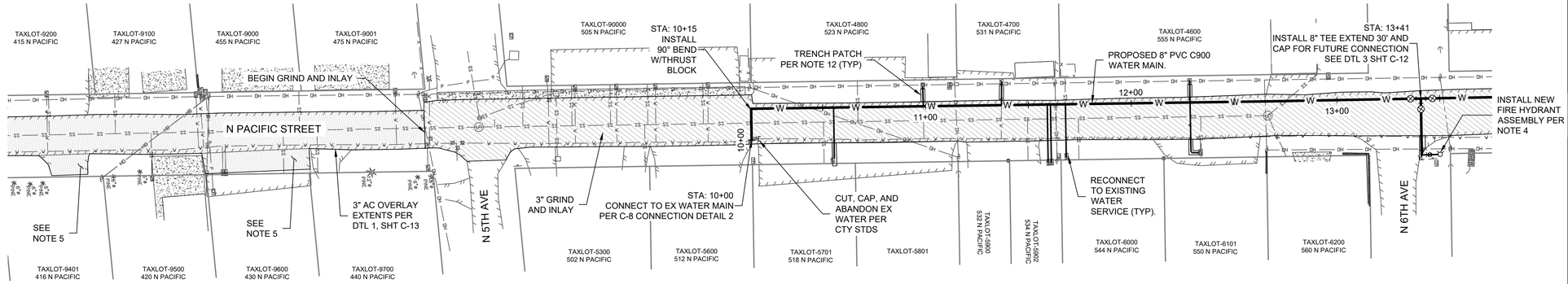

N PACIFIC ST IMPROVEMENTS PLAN VIEW

SCALE: 1" = 30'

SCALE 1"=30' (HORZ.)

30 15 7.5 0 30

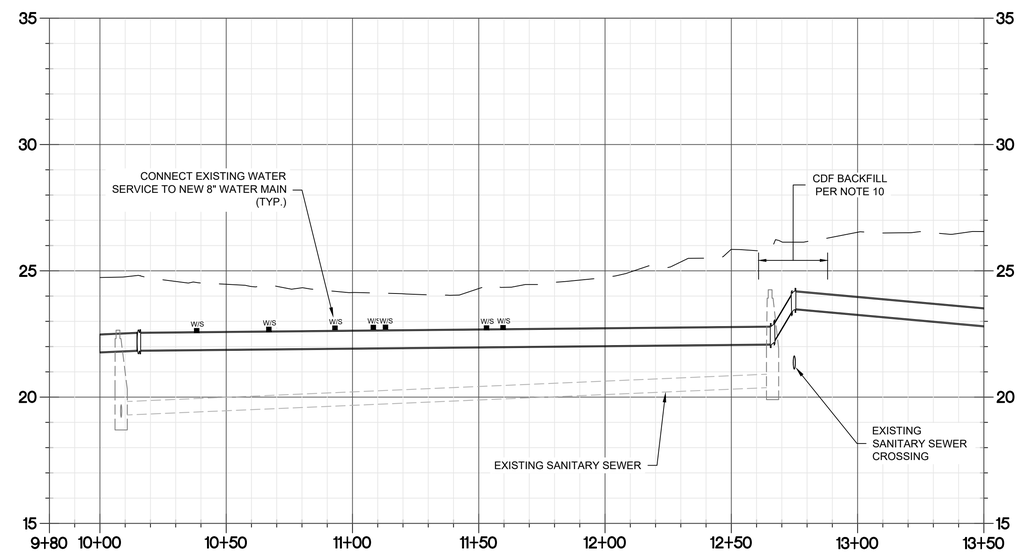

N PACIFIC ST IMPROVEMENTS PROFILE VIEW

HORIZONTAL SCALE: 1" = 30'
VERTICAL SCALE: 1" = 3'

WATER SERVICE LEGEND				
APPROX. STATION	STREET ADDRESS	APPROX. LENGTH (LF)	METER SIZE	NOTES
10+55	518 N PACIFIC ST	24	3/4"	RECONNECT TO EX METER
10+99	523 N PACIFIC ST	9	2"	RECONNECT TO EX METER
11+38	531 N PACIFIC ST	11	3/4"	RECONNECT TO EX METER
11+60	534 N PACIFIC ST	28	3/4"	RECONNECT TO EX METER
11+62	534 N PACIFIC ST	28	3/4"	RECONNECT TO EX METER
11+69	544 N PACIFIC ST	25	3/4"	RECONNECT TO EX METER
12+29	555 N PACIFIC ST	10	1-1/2"	RECONNECT TO EX METER
12+30	550 N PACIFIC ST	28	3/4"	RECONNECT TO EX METER

NOTES

1. PROPOSED WATER MAIN SHALL BE 8" PVC C900 UNLESS OTHERWISE NOTED. OPEN TRENCH WATER MAIN WITH 36" MINIMUM COVER PER CITY STD DTL T-200, SHT C-14.
2. CONTRACTOR TO POTHOLE ALL CONNECTIONS TO EXISTING WATER PIPING PRIOR TO CONSTRUCTION TO VERIFY DEPTHS, SIZING & TYPE OF JOINT TO CONNECT TO. POTHOLE ALL EXISTING UTILITY CROSSINGS TO VERIFY DEPTH PRIOR TO CONSTRUCTION.
3. AFTER NEW WATER MAIN IS FLUSHED AND TESTED, MAKE NEW SERVICE CONNECTIONS FROM NEW WATER MAIN TO EXISTING METERS IN ACCORDANCE WITH CITY STD DTLS W-505, W-600 AND W-605 ON SHT C-13. WATER SERVICE CONNECTIONS SHALL BE FLUSHED AND TESTED AS WELL.
4. INSTALL FIRE HYDRANT ASSEMBLY PER CITY STD DTL W-300 ON SHT C-13
5. TAPER GRIND 10' TRANSITION TO EXISTING ASPHALT DRIVEWAY APRON
6. TAPER GRIND 20' TRANSITION TO EX ASPHALT ROADWAY.
7. MAINTAIN ACCESS TO ALL RESIDENCES DURING CONSTRUCTION AT ALL TIMES.
8. RESTRAIN ALL FITTINGS & VALVES. PROVIDE THRUST BLOCKING AT ALL BENDS.
9. SANITARY SEWER LATERAL LOCATIONS ARE ESTIMATED BASED OFF SURVEYED SANITARY CLEANOUT LOCATIONS. CONTRACTOR TO VERIFY SANITARY SEWER LATERAL DEPTHS AND LOCATIONS.
10. MAINTAIN MINIMUM 18" VERTICAL SEPARATION AT ALL SANITARY SEWER CROSSINGS. IF 18" SEPARATION IS NOT POSSIBLE, BACKFILL TRENCH WITH CONTROLLED DENSITY FILL (CDF) PER DTL 6, SHT C-12 AND SECTIONS 02320 AND 02510 OF THE SPECIFICATIONS, AND CENTER A STICK OF PROPOSED WATER PIPE AT THE CROSSING.
11. MANHOLE LIDS, VALVE CANS AND OTHER SUCH STRUCTURES SHALL HAVE BEEN COMPLETED, ADJUSTED, CURED AND OTHERWISE PREPARED, AS APPLICABLE AND MADE CLEAN AND READY FOR ASPHALT PLACEMENT.
12. ALL ASPHALT DISTURBED BY TRENCH EXCAVATION SHALL BE RESTORED BY PER CTY STD DTL T-201, SHT C-14.

REGISTERED PROFESSIONAL ENGINEER
93836PE
Matthew Del Moro, PE
OREGON
JULY 10, 2018
MATTHEW C. DEL MORO
EXPIRES 12/31/2025

H B H CONSULTING ENGINEERS
501 E First Street
Newberg, Oregon 97132
503/554-9553 ■ fax 503/537-9554
email: mail@hbh-consulting.com

Designed By: ZHH | Drawn By: JCA | Checked By: MCD | Submittal No: BID SET
File: L:\2025-005.01\4-Design\DWG\WATER LINE IMPROVEMENTS.dwg

REV.	DATE	DESCRIPTION	BY

0" 1"
IF THIS LINE IS NOT 1 INCH
SCALE IS NOT AS SHOWN

CITY OF ROCKAWAY BEACH
PO BOX 5, ROCKAWAY BEACH, OR. 97136

N PACIFIC ST IMPROVEMENTS PROJECT
ROCKAWAY BEACH

PROPOSED IMPROVEMENTS
STA 10+00 TO 13+50

Date 7/22/2025
Sheet No. C-8
8 OF 14

2025-005.01

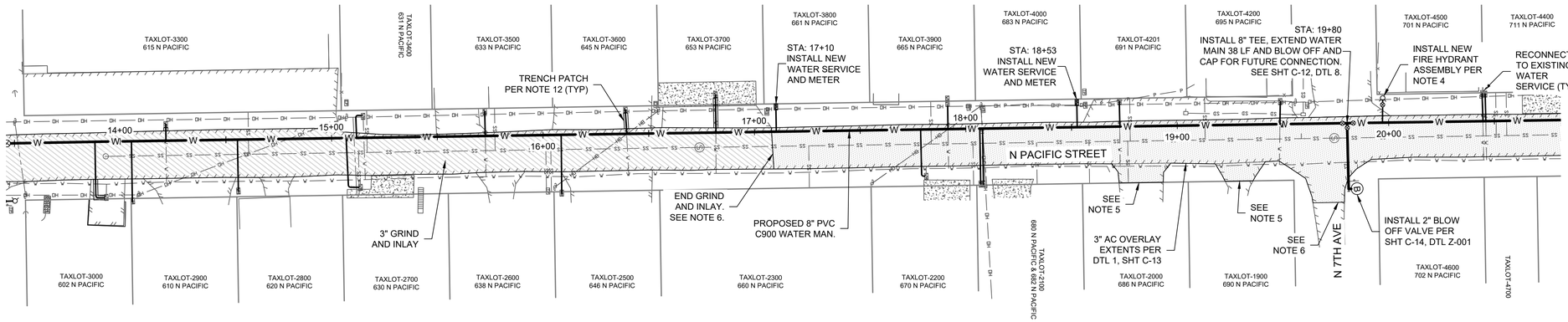

N PACIFIC ST IMPROVEMENTS PLAN VIEW

SCALE: 1" = 30'

SCALE 1"=30' (HORZ.)

30 15 7.5 0 30

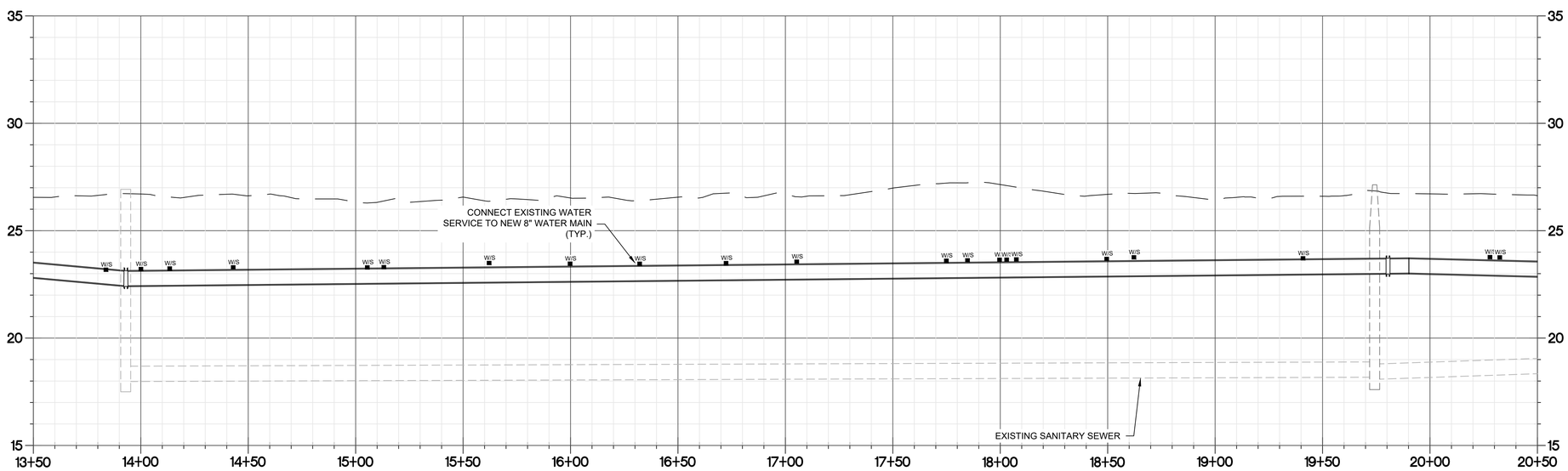

N PACIFIC ST IMPROVEMENTS PROFILE VIEW

HORIZONTAL SCALE: 1" = 30'
VERTICAL SCALE: 1" = 3'

WATER SERVICE LEGEND

APPROX. STATION	STREET ADDRESS	APPROX. LENGTH (LF)	METER SIZE	NOTES
13+94	602 N PACIFIC ST	30	3/4"	RECONNECT TO EX METER
14+06	610 N PACIFIC ST	28	3/4"	RECONNECT TO EX METER
14+22	615 N PACIFIC ST	8	2"	RECONNECT TO EX METER
14+56	620 N PACIFIC ST	24	3/4"	RECONNECT TO EX METER
15+14	630 N PACIFIC ST	29	1"	RECONNECT TO EX METER
15+16	631 N PACIFIC ST	13	3/4"	RECONNECT TO EX METER
15+73	633 N PACIFIC ST	12	3/4"	RECONNECT TO EX METER
16+09	646 N PACIFIC ST	28	3/4"	RECONNECT TO EX METER
16+39	645 N PACIFIC ST	11	3/4"	RECONNECT TO EX METER
16+82	653 N PACIFIC ST	18	3/4"	RECONNECT TO EX METER
17+10	661 N PACIFIC ST	11	3/4"	NEW WATER SERVICE
17+88	670 N PACIFIC ST	23	3/4"	RECONNECT TO EX METER
17+92	665 N PACIFIC ST	10	3/4"	RECONNECT TO EX METER
18+07	680 N PACIFIC ST	26	3/4"	RECONNECT TO EX METER
18+09	680 N PACIFIC ST	26	3/4"	RECONNECT TO EX METER
18+53	691 N PACIFIC ST	11	3/4"	NEW WATER SERVICE
18+73	691 N PACIFIC ST	12	3/4"	RECONNECT TO EX METER
19+51	695 N PACIFIC ST	10	3/4"	RECONNECT TO EX METER
20+45	701 N PACIFIC ST	13	3/4"	RECONNECT TO EX METER
20+46	711 N PACIFIC ST	13	3/4"	RECONNECT TO EX METER

NOTES

1. PROPOSED WATER MAIN SHALL BE 8" PVC C900 UNLESS OTHERWISE NOTED. OPEN TRENCH WATER MAIN WITH 36" MINIMUM COVER PER CITY STD DTL T-200, SHT C-14.
2. CONTRACTOR TO POTHOLE ALL CONNECTIONS TO EXISTING WATER PIPING PRIOR TO CONSTRUCTION TO VERIFY DEPTHS, SIZING & TYPE OF JOINT TO CONNECT TO. POTHOLE ALL EXISTING UTILITY CROSSINGS TO VERIFY DEPTH PRIOR TO CONSTRUCTION.
3. AFTER NEW WATER MAIN IS FLUSHED AND TESTED, MAKE NEW SERVICE CONNECTIONS FROM NEW WATER MAIN TO EXISTING METERS IN ACCORDANCE WITH CITY STD DTLS W-505, W-600 AND W-605 ON SHT C-13. WATER SERVICE CONNECTIONS SHALL BE FLUSHED AND TESTED AS WELL.
4. INSTALL FIRE HYDRANT ASSEMBLY PER CITY STD DTL W-300 ON SHT C-13
5. TAPER GRIND 10' TRANSITION TO EXISTING ASPHALT DRIVEWAY APRON
6. TAPER GRIND 20' TRANSITION TO EX ASPHALT ROADWAY.
7. MAINTAIN ACCESS TO ALL RESIDENCES DURING CONSTRUCTION AT ALL TIMES.
8. RESTRAIN ALL FITTINGS & VALVES. PROVIDE THRUST BLOCKING AT ALL BENDS.
9. SANITARY SEWER LATERAL LOCATIONS ARE ESTIMATED BASED OFF SURVEYED SANITARY CLEANOUT LOCATIONS. CONTRACTOR TO VERIFY SANITARY SEWER LATERAL DEPTHS AND LOCATIONS.
10. MAINTAIN MINIMUM 18" VERTICAL SEPARATION AT ALL SANITARY SEWER CROSSINGS. IF 18" SEPARATION IS NOT POSSIBLE, BACKFILL TRENCH WITH CONTROLLED DENSITY FILL (CDF) PER DTL 6, SHT C-12 AND SECTIONS 02320 AND 02510 OF THE SPECIFICATIONS, AND CENTER A STICK OF PROPOSED WATER PIPE AT THE CROSSING.
11. MANHOLE LIDS, VALVE CANS AND OTHER SUCH STRUCTURES SHALL HAVE BEEN COMPLETED, ADJUSTED, CURED AND OTHERWISE PREPARED, AS APPLICABLE AND MADE CLEAN AND READY FOR ASPHALT PLACEMENT.

REGISTERED PROFESSIONAL ENGINEER
93830PE
Matthew Del Moro, PE
OREGON
JULY 10, 2018
MATTHEW C. DEL MORO
EXPIRES 12/31/2025

H B H CONSULTING ENGINEERS
501 E First Street
Newberg, Oregon 97132
503/554-9553 ■ fax 503/537-9554
email: mail@hbh-consulting.com

Designed By: ZHH | Drawn By: JCA | Checked By: MCD | Submittal No: BID SET
File: L:\2025-005.01\4-Design\DWG\WATER LINE IMPROVEMENTS.dwg

REV.	DATE	DESCRIPTION	BY

0" 1"
IF THIS LINE IS NOT 1 INCH
SCALE IS NOT AS SHOWN

CITY OF ROCKAWAY BEACH
PO BOX 5, ROCKAWAY BEACH, OR. 97136

N PACIFIC ST IMPROVEMENTS PROJECT
ROCKAWAY BEACH

PROPOSED IMPROVEMENTS
STA 13+50 TO 20+50

Date: 7/22/2025
Sheet No. C-9
9 of 14
2025-005.01

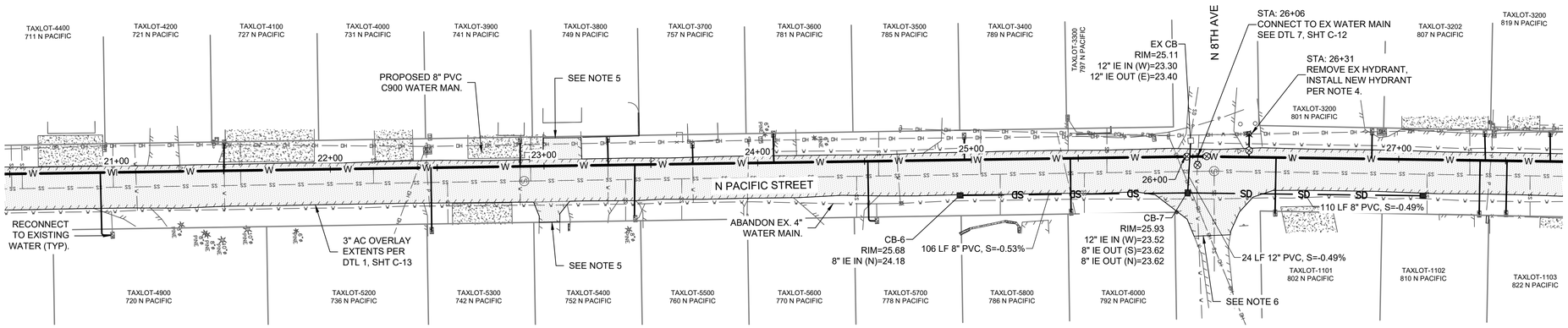

N PACIFIC ST IMPROVEMENTS PLAN VIEW

SCALE: 1" = 30'

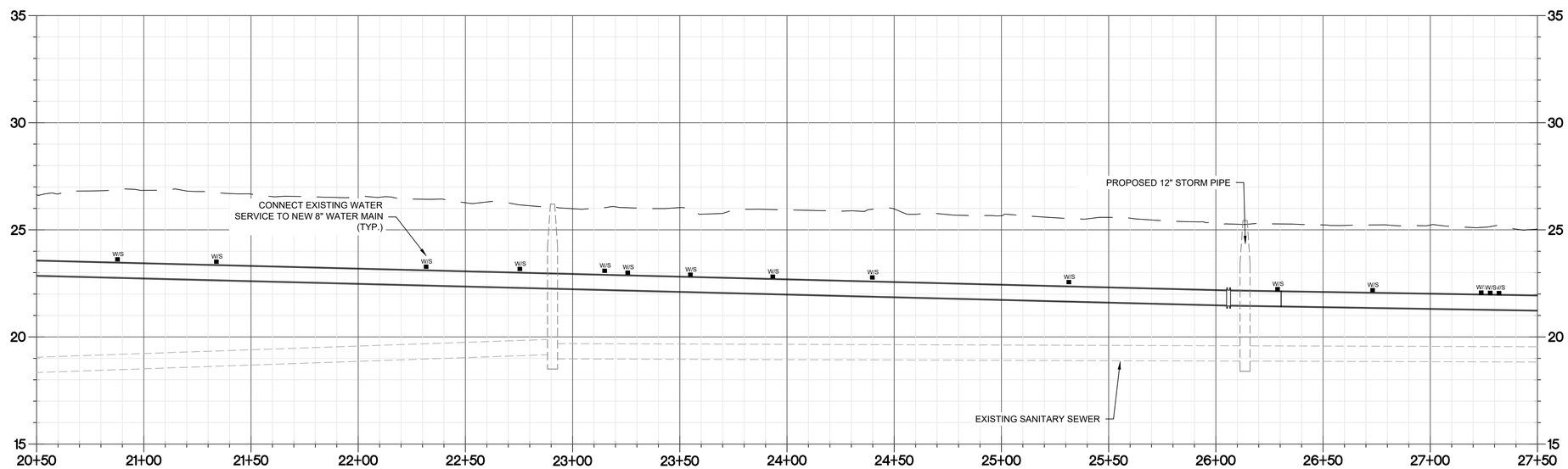

N PACIFIC ST IMPROVEMENTS PROFILE VIEW

HORIZONTAL SCALE: 1" = 30'
VERTICAL SCALE: 1" = 3'

WATER SERVICE LEGEND

APPROX. STATION	STREET ADDRESS	APPROX. LENGTH (LF)	METER SIZE	NOTES
20+93	720 N PACIFIC ST	33	3/4"	RECONNECT TO EX METER
21+54	729 N PACIFIC ST	12	3/4"	RECONNECT TO EX METER
22+47	760 N PACIFIC ST	30	3/4"	RECONNECT TO EX METER
22+89	741 N PACIFIC ST	11	3/4"	RECONNECT TO EX METER
23+29	749 N PACIFIC ST	12	3/4"	RECONNECT TO EX METER
23+45	752 N PACIFIC ST	24	3/4"	RECONNECT TO EX METER
23+73	757 N PACIFIC ST	9	3/4"	RECONNECT TO EX METER
24+07	781 N PACIFIC ST	13	3/4"	RECONNECT TO EX METER
24+51	778 N PACIFIC ST	30	3/4"	RECONNECT TO EX METER
24+97	789 N PACIFIC ST	10	3/4"	RECONNECT TO EX METER
25+46	792 N PACIFIC ST	25	3/4"	RECONNECT TO EX METER
26+43	802 N PACIFIC ST	26	3/4"	RECONNECT TO EX METER
26+88	801 N PACIFIC ST	11	3/4"	RECONNECT TO EX METER
27+38	810 N PACIFIC ST	25	3/4"	RECONNECT TO EX METER
27+40	807 N PACIFIC ST	12	3/4"	RECONNECT TO EX METER

NOTES

1. PROPOSED WATER MAIN SHALL BE 8" PVC C900 UNLESS OTHERWISE NOTED. OPEN TRENCH WATER MAIN WITH 36" MINIMUM COVER PER CITY STD DTL T-200, SHT C-14.
2. CONTRACTOR TO POTHOLE ALL CONNECTIONS TO EXISTING WATER PIPING PRIOR TO CONSTRUCTION TO VERIFY DEPTHS, SIZING & TYPE OF JOINT TO CONNECT TO. POTHOLE ALL EXISTING UTILITY CROSSINGS TO VERIFY DEPTH PRIOR TO CONSTRUCTION.
3. AFTER NEW WATER MAIN IS FLUSHED AND TESTED, MAKE NEW SERVICE CONNECTIONS FROM NEW WATER MAIN TO EXISTING METERS IN ACCORDANCE WITH CITY STD DTLS W-505, W-600 AND W-605 ON SHT C-13. WATER SERVICE CONNECTIONS SHALL BE FLUSHED AND TESTED AS WELL.
4. INSTALL FIRE HYDRANT ASSEMBLY PER CITY STD DTL W-300 ON SHT C-13
5. TAPER GRIND 10' TRANSITION TO EXISTING ASPHALT DRIVEWAY APRON
6. TAPER GRIND 20' TRANSITION TO EX ASPHALT ROADWAY.
7. MAINTAIN ACCESS TO ALL RESIDENCES DURING CONSTRUCTION AT ALL TIMES.
8. RESTRAIN ALL FITTINGS & VALVES. PROVIDE THRUST BLOCKING AT ALL BENDS.
9. SANITARY SEWER LATERAL LOCATIONS ARE ESTIMATED BASED OFF SURVEYED SANITARY CLEANOUT LOCATIONS. CONTRACTOR TO VERIFY SANITARY SEWER LATERAL DEPTHS AND LOCATIONS.
10. MAINTAIN MINIMUM 18" VERTICAL SEPARATION AT ALL SANITARY SEWER CROSSINGS. IF 18" SEPARATION IS NOT POSSIBLE, BACKFILL TRENCH WITH CONTROLLED DENSITY FILL (CDF) PER DTL 6, SHT C-12 AND SECTIONS 02320 AND 02510 OF THE SPECIFICATIONS, AND CENTER A STICK OF PROPOSED WATER PIPE AT THE CROSSING.
11. MANHOLE LIDS, VALVE CANS AND OTHER SUCH STRUCTURES SHALL HAVE BEEN COMPLETED, ADJUSTED, CURED AND OTHERWISE PREPARED, AS APPLICABLE AND MADE CLEAN AND READY FOR ASPHALT PLACEMENT.
12. ALL ASPHALT DISTURBED BY TRENCH EXCAVATION SHALL BE RESTORED PER CTY STD DTL T-201, SHT C-14.
13. ALL PROPOSED CATCH BASINS SHALL BE 24" TYPE G1 PER C-14, RD364.

REGISTERED PROFESSIONAL ENGINEER
93936PE
Matthew Del Moro, PE
OREGON
JULY 10, 2018
MATTHEW C. DEL MORO
EXPIRES 12/31/2025

H B H
CONSULTING ENGINEERS
501 E First Street
Newberg, Oregon 97132
503/554-9553 ■ fax 503/537-9554
email: mail@hbh-consulting.com

Designed By: ZHH | Drawn By: JCA | Checked By: MCD | Submittal No: | BID SET

File: L:\2025-005.01\4-Design\DWG\WATER LINE IMPROVEMENTS.dwg

REV.	DATE	DESCRIPTION	BY

0" 1"
IF THIS LINE IS NOT 1 INCH
SCALE IS NOT AS SHOWN

CITY OF ROCKAWAY BEACH
PO BOX 5, ROCKAWAY BEACH, OR. 97136

N PACIFIC ST IMPROVEMENTS PROJECT
ROCKAWAY BEACH

PROPOSED IMPROVEMENTS
STA 20+50 TO 27+50

Date: 7/22/2025
Sheet No. C-10
10 OF 14
2025-005.01

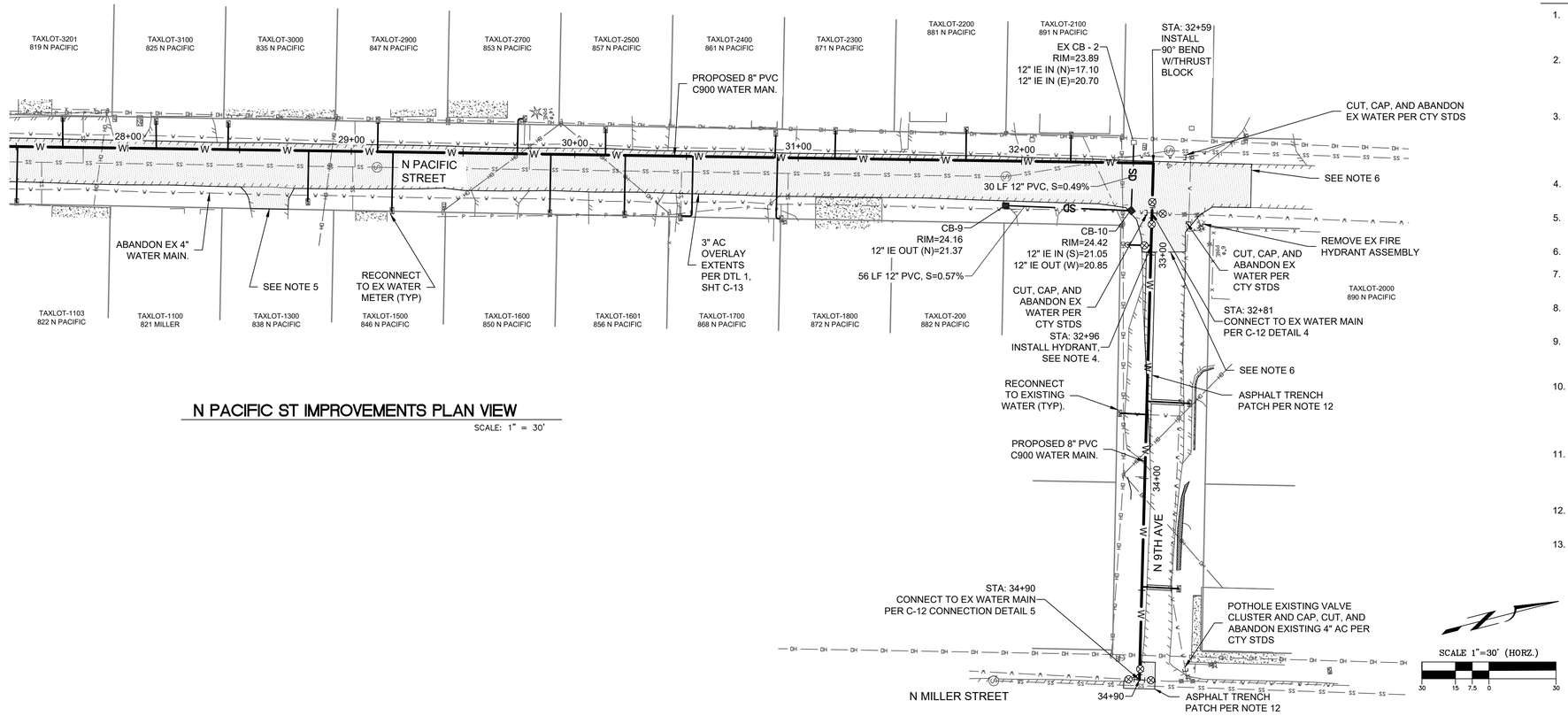

N PACIFIC ST IMPROVEMENTS PLAN VIEW

SCALE: 1" = 30'

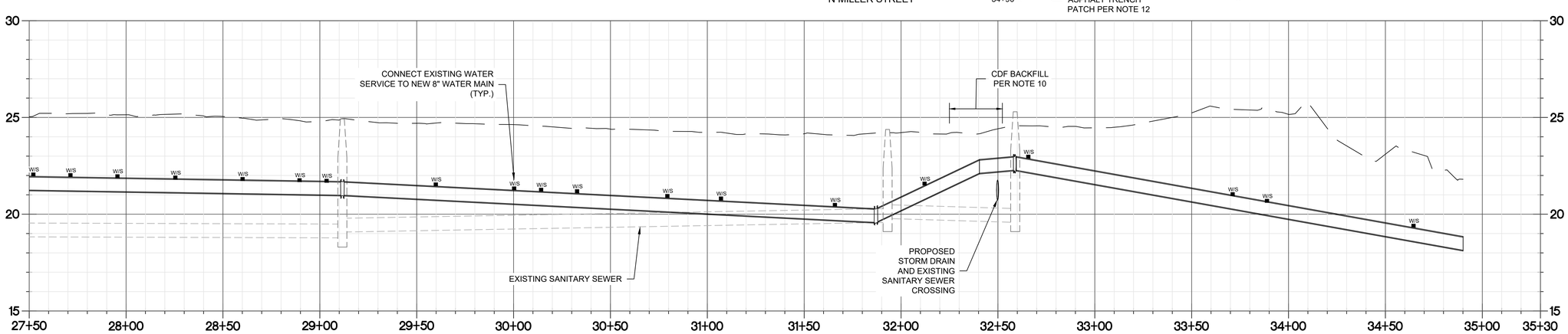

N PACIFIC ST IMPROVEMENTS PROFILE VIEW

HORIZONTAL SCALE: 1" = 30'
VERTICAL SCALE: 1" = 3'

WATER SERVICE LEGEND					WATER SERVICE LEGEND				
APPROX. STATION	STREET ADDRESS	APPROX. LENGTH (LF)	METER SIZE	NOTES	APPROX. STATION	STREET ADDRESS	APPROX. LENGTH (LF)	METER SIZE	NOTES
27+51	822 N PACIFIC ST	25	3/4"	RECONNECT TO EX METER	30+22	856 N PACIFIC ST	26	3/4"	RECONNECT TO EX METER
27+71	819 N PACIFIC ST	13	3/4"	RECONNECT TO EX METER	30+52	868 N PACIFIC ST	31	3/4"	RECONNECT TO EX METER
28+12	825 N PACIFIC ST	12	3/4"	RECONNECT TO EX METER	30+90	861 N PACIFIC ST	10	3/4"	RECONNECT TO EX METER
28+44	835 N PACIFIC ST	12	3/4"	RECONNECT TO EX METER	30+91	872 N PACIFIC ST	28	3/4"	RECONNECT TO EX METER
28+81	838 N PACIFIC ST	22	3/4"	RECONNECT TO EX METER	31+16	871 N PACIFIC ST	12	3/4"	RECONNECT TO EX METER
29+12	847 N PACIFIC ST	12	3/4"	RECONNECT TO EX METER	31+75	881 N PACIFIC ST	13	3/4"	RECONNECT TO EX METER
29+19	846 N PACIFIC ST	25	3/4"	RECONNECT TO EX METER	32+22	891 N PACIFIC ST	12	3/4"	RECONNECT TO EX METER
29+77	853 N PACIFIC ST	17	3/4"	RECONNECT TO EX METER	33+65	115 NW 9TH AVE	19	3/4"	RECONNECT TO EX METER
29+89	850 N PACIFIC ST	26	3/4"	RECONNECT TO EX METER	33+71	890 NW 9TH AVE	12	3/4"	RECONNECT TO EX METER
30+14	857 N PACIFIC ST	11	3/4"	RECONNECT TO EX METER	34+48	105 NW 9TH AVE	17	3/4"	RECONNECT TO EX METER

NOTES

1. PROPOSED WATER MAIN SHALL BE 8" PVC C900 UNLESS OTHERWISE NOTED. OPEN TRENCH WATER MAIN WITH 36" MINIMUM COVER PER CITY STD DTL T-200, SHT C-14.
2. CONTRACTOR TO POTHOLE ALL CONNECTIONS TO EXISTING WATER PIPING PRIOR TO CONSTRUCTION TO VERIFY DEPTHS, SIZING & TYPE OF JOINT TO CONNECT TO. POTHOLE ALL EXISTING UTILITY CROSSINGS TO VERIFY DEPTH PRIOR TO CONSTRUCTION.
3. AFTER NEW WATER MAIN IS FLUSHED AND TESTED, MAKE NEW SERVICE CONNECTIONS FROM NEW WATER MAIN TO EXISTING METERS IN ACCORDANCE WITH CITY STD DTLS W-505, W-600 AND W-605 ON SHT C-13. WATER SERVICE CONNECTIONS SHALL BE FLUSHED AND TESTED AS WELL.
4. INSTALL FIRE HYDRANT ASSEMBLY PER CITY STD DTL W-300 ON SHT C-13
5. TAPER GRIND 10' TRANSITION TO EXISTING ASPHALT DRIVEWAY APRON
6. TAPER GRIND 20' TRANSITION TO EX ASPHALT ROADWAY.
7. MAINTAIN ACCESS TO ALL RESIDENCES DURING CONSTRUCTION AT ALL TIMES.
8. RESTRAIN ALL FITTINGS & VALVES. PROVIDE THRUST BLOCKING AT ALL BENDS.
9. SANITARY SEWER LATERAL LOCATIONS ARE ESTIMATED BASED OFF SURVEYED SANITARY CLEANOUT LOCATIONS. CONTRACTOR TO VERIFY SANITARY SEWER LATERAL DEPTHS AND LOCATIONS.
10. MAINTAIN MINIMUM 18" VERTICAL SEPARATION AT ALL SANITARY SEWER CROSSINGS. IF 18" SEPARATION IS NOT POSSIBLE, BACKFILL TRENCH WITH CONTROLLED DENSITY FILL (CDF) PER DTL 6, SHT C-12 AND SECTIONS 02320 AND 02510 OF THE SPECIFICATIONS, AND CENTER A STICK OF PROPOSED WATER PIPE AT THE CROSSING.
11. MANHOLE LIDS, VALVE CANS AND OTHER SUCH STRUCTURES SHALL HAVE BEEN COMPLETED, ADJUSTED, CURED AND OTHERWISE PREPARED, AS APPLICABLE AND MADE CLEAN AND READY FOR ASPHALT PLACEMENT.
12. ALL ASPHALT DISTURBED BY TRENCH EXCAVATION SHALL BE RESTORED BY PER CTY STD DTL T-201, SHT C-14.
13. ALL PROPOSED CATCH BASINS SHALL BE 24" TYPE G1 PER C-14, RD364.

REGISTERED PROFESSIONAL ENGINEER 93836PE OREGON JULY 10, 2018 MATTHEW C. DEL MORO
Matthew Del Moro, PE
EXPIRES 12/31/2025

H B H CONSULTING ENGINEERS
501 E First Street
Newberg, Oregon 97132
503/554-9553 ■ fax 503/537-9554
email: mail@hbh-consulting.com

Designed By: ZHH | Drawn By: JCA | Checked By: MCD | Submittal No: BID SET
File: L:\2025-005.01\4-Design\DWG\WATER LINE IMPROVEMENTS.dwg

REV.	DATE	DESCRIPTION	BY

0" 1"
IF THIS LINE IS NOT 1 INCH SCALE IS NOT AS SHOWN

CITY OF ROCKAWAY BEACH
PO BOX 5, ROCKAWAY BEACH, OR. 97136

N PACIFIC ST IMPROVEMENTS PROJECT
ROCKAWAY BEACH

PROPOSED IMPROVEMENTS
17+50 TO 25+15

Date: 7/22/2025
Sheet No. C-11
11 OF 14
2025-005.01

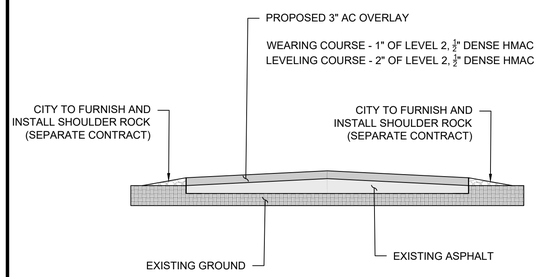

DETAIL 1 - PAVEMENT OVERLAY SECTION

NTS

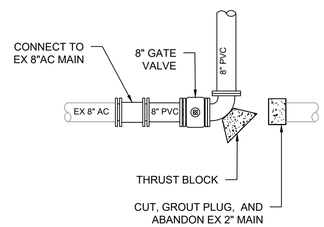

DETAIL 2 - PACIFIC ST + 5TH AVE

NTS

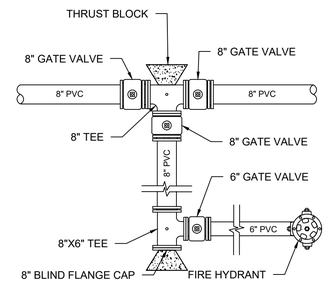

DETAIL 3 - PACIFIC ST + 6TH AVE

NTS

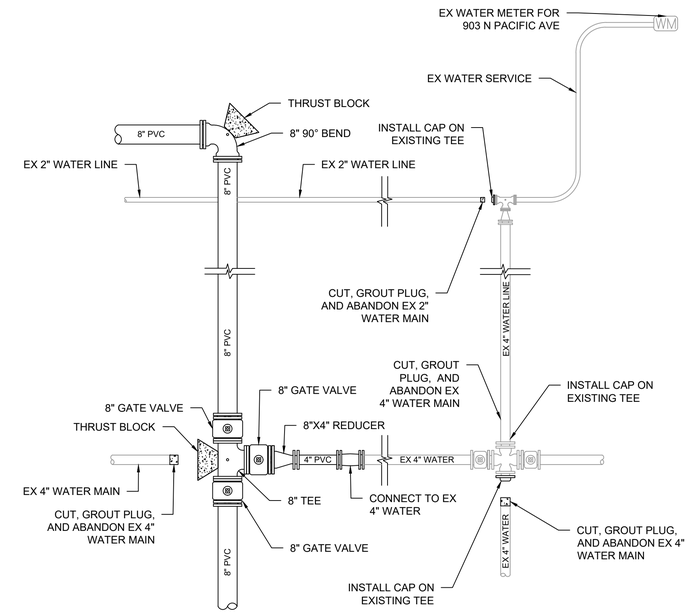

DETAIL 4 - PACIFIC ST + 9TH AVE CONNECTION

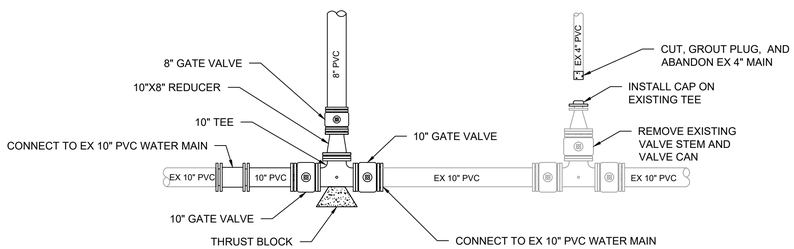

DETAIL 5 - MILLER ST + 9TH AVE CONNECTION

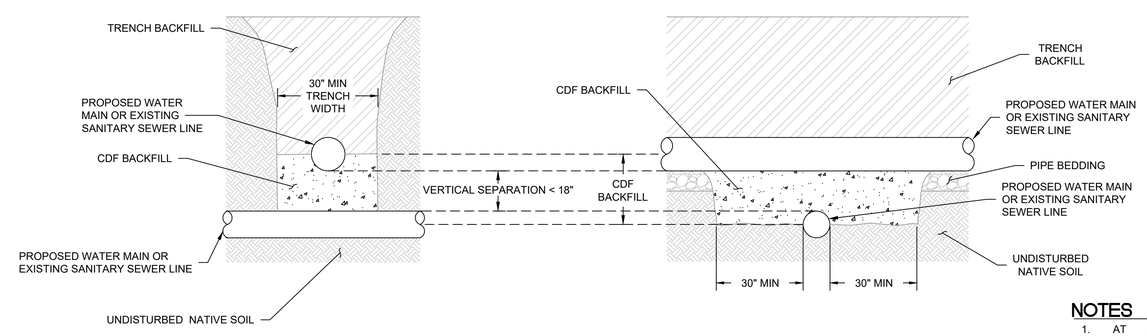

DETAIL 6 - SANITARY SEWER CROSSING WITH <18" VERTICAL SEPARATION

NOTES

1. AT SANITARY SEWER CROSSINGS WITH LESS THAN 18" OF VERTICAL SEPARATION, CONTRACTOR SHALL CENTER A STICK OF PROPOSED WATER PIPE AT THE CROSSING.

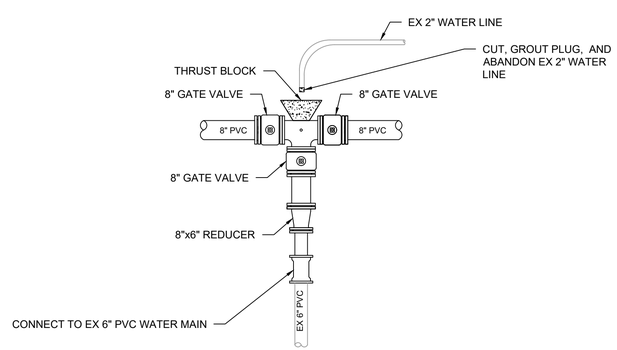

DETAIL 7 - PACIFIC ST + 8TH AVE CONNECTION

NTS

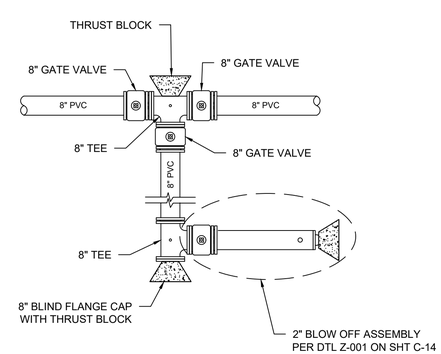

DETAIL 8 - PACIFIC ST + 7TH AVE

NTS

REGISTERED PROFESSIONAL ENGINEER
93535PE
Matthew Del Moro, PE
OREGON
JULY 10, 2018
MATTHEW C. DEL MORO
EXPIRES 12/31/2025

H B H CONSULTING ENGINEERS
501 E First Street
Newberg, Oregon 97132
503/554-9553 ■ fax 503/537-9554
email: mail@hbh-consulting.com

Designed By:	ZHH	Drawn By:	JCA	Checked By:	MCD	Submittal No:	BID SET

File: L:\2025-005.01\4-Design\DWG\DETAILS.dwg

REV.	DATE	DESCRIPTION	BY

0" 1"
IF THIS LINE IS NOT 1 INCH SCALE IS NOT AS SHOWN

CITY OF ROCKAWAY BEACH
PO BOX 5, ROCKAWAY BEACH, OR. 97136

N PACIFIC ST IMPROVEMENTS PROJECT
ROCKAWAY BEACH

CONNECTION DETAILS

Sheet No. C-12
Date 7/22/2025
12 OF 14
2025-005.01

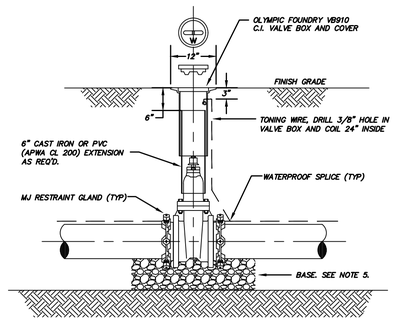

NOTES:

1. VALVE BOX SHALL BE CENTERED OVER VALVE OPERATING NUT.
2. PVC EXTENSION SHALL BEGIN AS CLOSE TO VALVE AS POSSIBLE AND SHALL EXTEND TO WITHIN 6" OF GROUND SURFACE.
3. TOP OF VALVE BOX SHALL BE FLUSH WITH FINISH GRADE.
4. VALVE EQUIPPED WITH 2" SQUARE OPERATING NUT LOCATED WITHIN 24" FROM GROUND SURFACE. SEE VALVE OPERATOR EXTENSION DETAIL WHERE REQUIRED.
5. VALVES 12" AND SMALLER SHALL BE PROVIDED WITH CLASS B BASE ON UNDISTURBED GROUND. VALVES GREATER THAN 12" SHALL BE INSTALLED ON PRECAST CONCRETE PIER BLOCK.
6. NO PIPE JOINTS ALLOWED WITHIN 10' OF IN-LINE VALVES UNLESS JOINT RESTRAINT DEVICE PROVIDED.
7. ALL VALVES 12" AND LARGER SHALL BE BUTTERFLY VALVES.
8. ALL FITTINGS AND VALVES SHALL BE RESTRAINED PER MANUFACTURER'S RECOMMENDATIONS.

City of Rockaway Beach
P.O. Box 5
Rockaway Beach, Oregon 97136
503.355.2291

STANDARD WATER VALVE SETTING DETAIL

DETAIL NO. W-200
May 2009

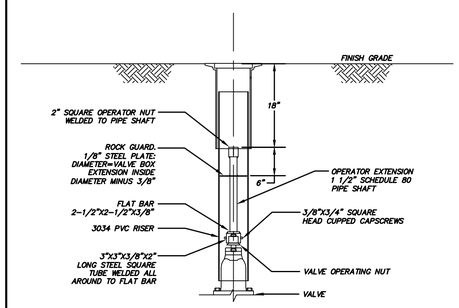

NOTES:

1. WHERE DEPTH IS OVER 6 FEET, A SECOND ROCK GUARD PLATE IS REQUIRED EQUALLY SPACED BETWEEN THE TOP ROCK GUARD AND THE VALVE NUT.

City of Rockaway Beach
P.O. Box 5
Rockaway Beach, Oregon 97136
503.355.2291

VALVE OPERATOR EXTENSION DETAIL

DETAIL NO. W-205
May 2009

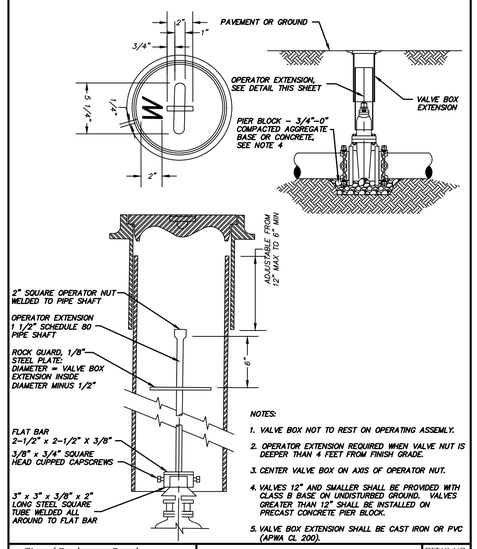

NOTES:

1. VALVE BOX NOT TO REST ON OPERATING ASSEMLY.
2. OPERATOR EXTENSION REQUIRED WHEN VALVE NUT IS DEEPER THAN 4 FEET FROM FINISH GRADE.
3. CENTER VALVE BOX ON AXIS OF OPERATOR NUT.
4. VALVES 12" AND SMALLER SHALL BE PROVIDED WITH CLASS B BASE ON UNDISTURBED GROUND. VALVES GREATER THAN 12" SHALL BE INSTALLED ON PRECAST CONCRETE PIER BLOCK.
5. VALVE BOX EXTENSION SHALL BE CAST IRON OR PVC (APWA CL 200).

City of Rockaway Beach
P.O. Box 5
Rockaway Beach, Oregon 97136
503.355.2291

VALVE BOX

DETAIL NO. W-520
May 2009

FITTING SIZE	(HORIZONTAL) BEARING AREA OF THRUST BLOCKS IN SQUARE FEET: TEE, WYE, DEAD END, AND HYDRANT	STRADDLE BLOCK	90° BEND	TEE PLUGGED ON RUN A-1	TEE PLUGGED ON RUN A-2	45° BEND	22-1/2° BEND	11-1/4° BEND	(VERTICAL UP) VOLUME OF THRUST BLOCK IN CUBIC YARDS: 90° BEND	45° BEND	22-1/2° BEND	11-1/4° BEND
4	1.0	1.6	1.4	1.9	1.4	1.0	----	----	----	----	----	----
6	2.1	3.7	3.0	4.3	3.0	1.6	1.0	----	1.3	----	----	----
8	3.8	6.5	5.3	7.6	5.4	2.9	1.5	1.0	2.3	1.1	----	----
10	5.9	10.2	8.4	11.8	8.4	4.5	2.4	1.2	3.7	1.8	----	----
12	8.5	14.7	12.0	17.0	12.0	6.6	3.4	1.7	5.5	2.8	1.2	----
14	11.5	----	16.3	23.0	16.3	8.9	4.6	2.3	7.5	3.9	1.7	----
16	15.0	26.1	21.3	30.0	21.3	11.6	5.0	3.0	9.9	5.1	2.3	0.9
18	19.0	----	27.0	38.0	27.0	14.6	7.6	3.8	----	----	----	----
20	23.5	40.8	33.3	47.0	33.3	18.1	9.4	4.7	----	----	----	----
24	34.0	58.8	48.0	68.0	48.0	26.2	13.6	6.8	----	----	----	----

NOTES:

1. ABOVE BEARING AREAS BASED ON TEST PRESSURE OF 150 PSI AND AN ALLOWABLE SOIL BEARING STRESS OF 2000 POUNDS PER SQUARE FOOT. TO COMPUTE BEARING AREAS FOR DIFFERENT TEST PRESSURES AND SOIL BEARING
   BEARING AREA = (TEST PRESSURE/150) x (2000/SOIL BEARING STRESS) x (TABLE VALUE)
2. ABOVE VOLUMES BASED ON TEST PRESSURE OF 150 PSI AND THE WEIGHT OF CONCRETE = 4050 POUNDS PER CUBIC YARD. TO COMPUTE FOR DIFFERENT TEST PRESSURES, USE THE FOLLOWING EQUATION:
   VOLUME = (TEST PRESSURE/150) x (TABLE VALUE)

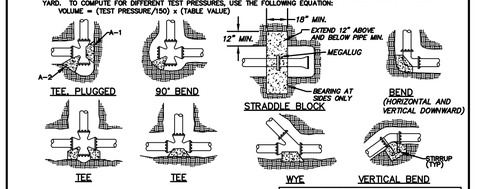

RODS FOR VERTICAL BENDS		
FITTING SIZE	ROD SIZE	EMBEDMENT
10" AND LESS	#5	17"
12"-16" (11.25°)	#5	17"
12"-16" (22.5°)	#7	24"
12" (45°)	#7	24"
14"-16" (45°)	#9	30"

NOTES:

1. CONCRETE BLOCKING TO BE POURED AGAINST UNDISTURBED EARTH.
2. ALL CONCRETE TO BE CLASS 2400 MINIMUM.
3. INSTALL ISOLATION MATERIAL BETWEEN PIPE AND/OR FITTINGS BEFORE POURING CONCRETE BLOCKING.
4. CONCRETE SHALL BE KEPT CLEAR OF ALL JOINTS AND ACCESSORIES.
5. TIE RODS SHALL BE DEFORMED GALVANIZED COLD ROLLED STEEL, 40000 PSI TENSILE STRENGTH (ASTM A615) COAT WITH COAL TAR EPOXY AFTER INSTALLATION.
6. BEARING AREA REQ'D AT REDUCERS IS THE DIFFERENCE BETWEEN VALUES FOR DEAD END FOR EACH END SIZE (IE 6x8 = 3.8-2.1 = 1.7 S.F.)

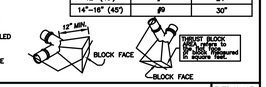

City of Rockaway Beach
P.O. Box 5
Rockaway Beach, Oregon 97136
503.355.2291

CONCRETE THRUST BLOCKING STANDARD DETAILS

DETAIL NO. W-700
May 2009

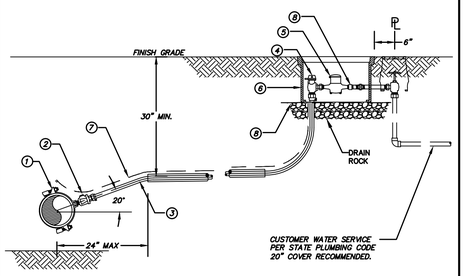

ITEM	SIZE	DESCRIPTION	SPECIFICATION
1	AS REQ'D	SADDLE	SMITH BLAIR 315 TYPE WITH DUCTILE IRON BODY 304 STAINLESS STEEL STRAPS (2)
2	3/4"	BALL CORP. STOP	MUELLER H-15456 FOR IPS PE PIPE
3	3/4"	SERVICE PIPE	MUNICIPEX
4	3/4" OR 5/8"	ANGLE CURB STOP	MUELLER B24265 BALL ANGLE METER VALVE
5	5/8" x 3/4"	WATER METER	SUPPLIED & INSTALLATION BY CITY
6	12"x20"X12"	METER BOX	BROOKS No 36 CORE BODY WITH No 36t C.I. COVER
7	13" x 20"	TRACER WIRE	#12, MULTI STRAND COPPER WIRE W/ BLUE INSULATION
8	3/4"	COUPLING	INSTA-TITE FITTING MUELLER FIP-H-15456 FOR IPS-PE PIPE

City of Rockaway Beach
P.O. Box 5
Rockaway Beach, Oregon 97136
503.355.2291

STANDARD 3/4" WATER SERVICE CONNECTION

DETAIL NO. W-600
May 2009

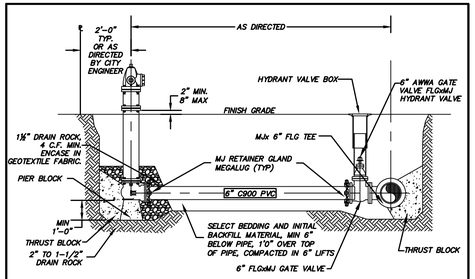

HYDRANT ASSEMBLY INCLUDES HYDRANT TEE AND HYDRANT VALVE.

NOTES:

1. FIELD VERIFY SPOOL LENGTHS AND HYDRANT BARREL LENGTH REQUIRED AT EACH HYDRANT. NO JOINTS ALLOWED WHERE SPOOL LENGTH IS LESS THAN 18 FEET.
2. HYDRANT SHALL BE INSTALLED PLUMB.
3. KEEP DRAIN HOLES CLEAR AND FREE TO DRAIN.
4. SEE DETAILS FOR VALVE SETTING, THRUST BLOCKING, AND TRENCH.
5. HYDRANTS, VALVES AND OTHER MATERIALS SHALL BE AS SPECIFIED IN CITY'S STANDARDS MANUAL.
6. A MINIMUM OF 36" OF CLEAR SPACE AROUND HYDRANTS IS REQUIRED PER UFC (NO POSTS, WALLS, SIGNS, ETC.). 5 FOOT MIN. DESIRED. THERE SHALL BE NO OBSTRUCTIONS DIRECTLY IN LINE WITH ANY OF THE PORTS OF A HYDRANT.
7. HYDRANT PUMPER PORT SHALL FACE DIRECTION OF ACCESS.
8. PROVIDE AN APPROVED 4-INCH STORZ-STYLE NON-THREADED CONNECTION WITH CAPS WITH A 4.5-INCH FEMALE NST FOR HYDRANT ATTACHMENT.
9. PLACE FIRE HYDRANT TO PROVIDE MIN. 5' CLEARANCE FROM DRIVEWAYS, POLES AND OTHER OBSTRUCTIONS.

City of Rockaway Beach
P.O. Box 5
Rockaway Beach, Oregon 97136
503.355.2291

STANDARD FIRE HYDRANT ASSEMBLY DETAIL

DETAIL NO. W-300
May 2009

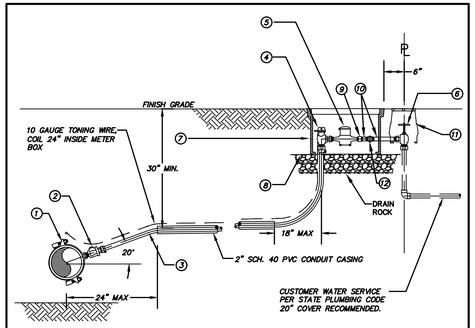

ITEM	SIZE	DESCRIPTION	SPECIFICATION
1	AS REQ'D	SADDLE	MUELLER BR 1S, 3/4" FIP TAP
2	1"	BALL CORP. STOP	MIP x PEP PACK JOINT; FORD F1100-34, MCDONALD 4704B-22
3	1"	SERVICE PIPE	POLYETHYLENE TYPE II IPS PIPE SDR 7
4	1"	ANGLE BALL METER VALVE	PEP PACK JOINT INLET x METER SWIVEL NUT OUTLET MUELLER 300 BALL CURB VALVES V-25100
5	1"	WATER METER	INVENSYS SR-II, GALLON READ (CITY SUPPLIES)
6	1"	SERVICE VALVE ANGLE GLOBE	METER SWIVEL NUT INLET X FIP OUTLET MUELLER GROUND KEY ANGLE METER VALVE H-14265
7	12"x20"X12"	METER BOX	ARMORCAST- BOX: A6000485-SA LID: A6000484-R
8	13" x 20"	FELT PAPER	90-LB FELT PAPER, ASPHALT SATURATED
9	1"	COUPLING	THREADED BRONZE COUPLING, SHORT
10	1"	NIPPLE	THREADED RED BRASS NIPPLE, LENGTH AS REQ'D
11	6" ROUND	VALVE BOX	ROUND VALVE BOX - RAINBIRD VB-6RND
12	1"	UNION	BRONZE UNION

City of Rockaway Beach
P.O. Box 5
Rockaway Beach, Oregon 97136
503.355.2291

STANDARD 1" WATER SERVICE CONNECTION

DETAIL NO. W-605
May 2009

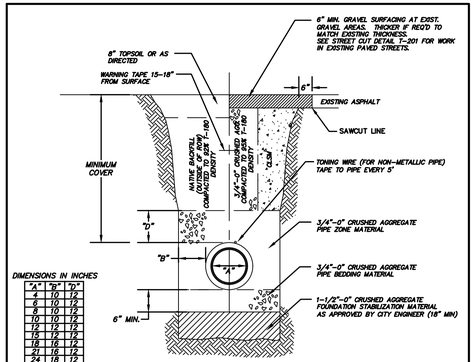

DIMENSIONS IN INCHES

"A"	"B"	"D"
4	10	12
6	10	12
8	10	12
10	10	12
12	12	12
15	12	12
18	12	12
21	12	12
24	12	12
30	12	12
36	24	14

NOTES:

1. TRENCH EXCAVATION SHALL BE CONDUCTED IN A SAFE MANNER WITH ALL NECESSARY BRACING AND SHORING PROVIDED FOR COMPLIANCE WITH OSHA.
2. FOUNDATION STABILIZATION SHALL BE PROVIDED WHEN MATERIAL AT BOTTOM OF TRENCH IS UNSUITABLE IN THE OPINION OF THE CITY TO PROVIDE A STABLE TRENCH BASE.
3. CONSTRUCTION IN PUBLIC RIGHT-OF-WAY SHALL COMPLY WITH CITY STANDARDS.
4. 3/4"-0" CRUSHED AGGREGATE BACKFILL REQUIRED IN ALL ROADWAYS AND TRAFFIC PATHS EXCEPT WHERE CLSM BACKFILL IS REQUIRED BY COUNTY, ODOT, OR CITY.
5. TONING WIRE REQUIRED AT SERVICE LATERALS. WIRE SHALL BE 12 GA. MINIMUM SOLID COPPER WIRE WITH GREEN 30 MIL THICK HDPE INSULATION RATED FOR DIRECT BURY. USE APPROVED WATERPROOF SPLICE AT ALL CONNECTIONS.
6. WARNING TAPE REQUIRED OVER MAINLINES AND SHALL BE 6" WIDE, 4 MIL THICK, APWA GREEN (SEWER) & BLUE (WATER), READING "CAUTION SEWER (OR WATER) LINE BURIED BELOW".
7. MINIMUM COVER OVER DRAINAGE CULVERT 12", WATER MAIN 30", SEWER 36".

City of Rockaway Beach
P.O. Box 5
Rockaway Beach, Oregon 97136
503.355.2291

TYPICAL TRENCH DETAIL

DETAIL NO. T-200
May 2009

REGISTERED PROFESSIONAL ENGINEER
93836PE
Matthew Del Moro, PE
OREGON
JULY 10, 2018
MATTHEW C. DEL MORO
EXPIRES 12/31/2025

H B H
CONSULTING ENGINEERS
501 E First Street
Newberg, Oregon 97132
503/554-9553 ■ fax 503/537-9554
email: mail@hbh-consulting.com

Designed By: ZHH | Drawn By: JCA | Checked By: MCD | Submittal No: BID SET
File: L:\2025-005.01\4-Design\DWG\DETAILS.dwg

REV.	DATE	DESCRIPTION	BY

0" 1"
IF THIS LINE IS NOT 1 INCH SCALE IS NOT AS SHOWN

CITY OF ROCKAWAY BEACH
PO BOX 5, ROCKAWAY BEACH, OR. 97136

N PACIFIC ST IMPROVEMENTS PROJECT
ROCKAWAY BEACH

STANDARD DETAILS

Sheet No. C-13
Date 7/22/2025
13 OF 14
2025-005.01

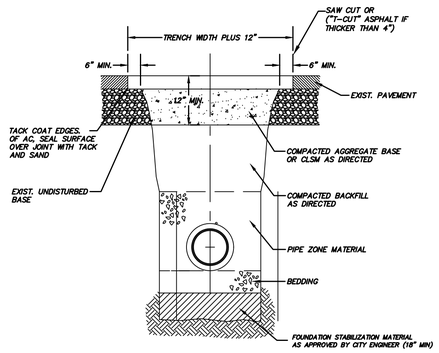

NOTES:

1. ALL EXISTING AC OR PCC PAVEMENT SHALL BE SAWCUT IMMEDIATELY PRIOR TO REPAVING.
2. CONCRETE PAVEMENT SHALL BE REPLACED WITH CONCRETE TO A MINIMUM THICKNESS OF 6 INCHES OR TO THE THICKNESS OF REMOVED PAVEMENT, WHICHEVER IS GREATER. JOINTS BETWEEN OLD AND NEW CONCRETE SHALL BE DOWELLED AND ONE SIDE OF THE REBAR GREASED TO AVOID BONDING.
3. PLACE AC MIX TO A MINIMUM THICKNESS OF 4 INCHES.

City of Rockaway Beach P.O. Box 5 Rockaway Beach, Oregon 97136 503.355.2291	STREET CUT STANDARD DETAIL	DETAIL NO. T-201 May 2009

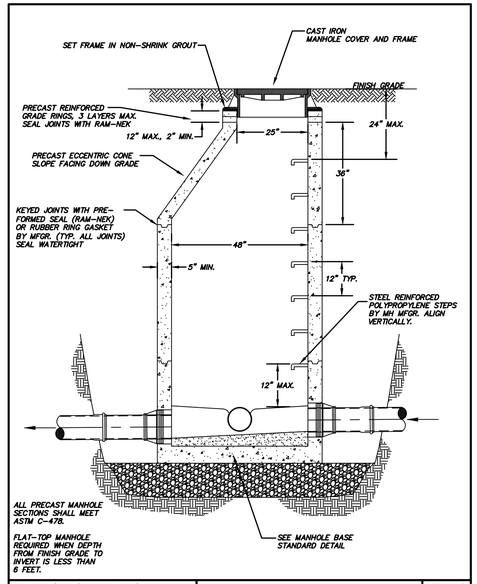

City of Rockaway Beach P.O. Box 5 Rockaway Beach, Oregon 97136 503.355.2291	STANDARD MANHOLE PIPES LESS THAN 24" DIAM.	DETAIL NO. S-200 9/08/03

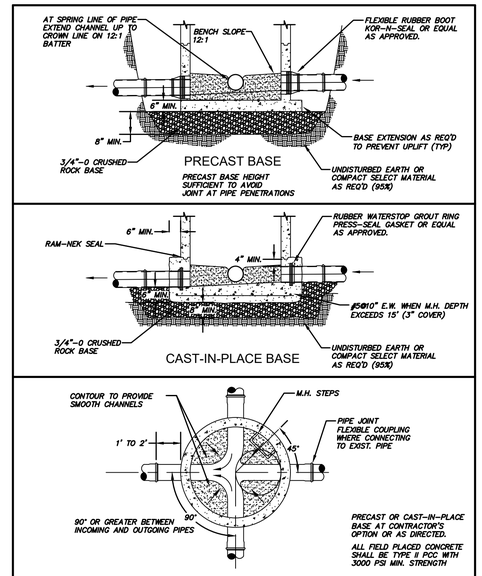

City of Rockaway Beach P.O. Box 5 Rockaway Beach, Oregon 97136 503.355.2291	MANHOLE BASE STANDARD DETAILS	DETAIL NO. S-210 9/08/03

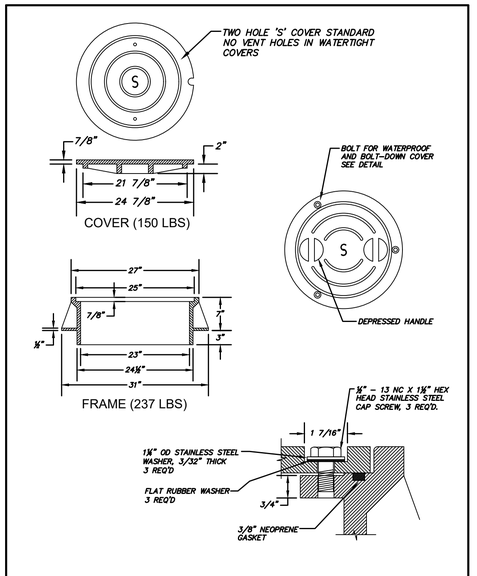

City of Rockaway Beach P.O. Box 5 Rockaway Beach, Oregon 97136 503.355.2291	MANHOLE COVER AND FRAME DETAILS	DETAIL NO. S-250 9/15/03

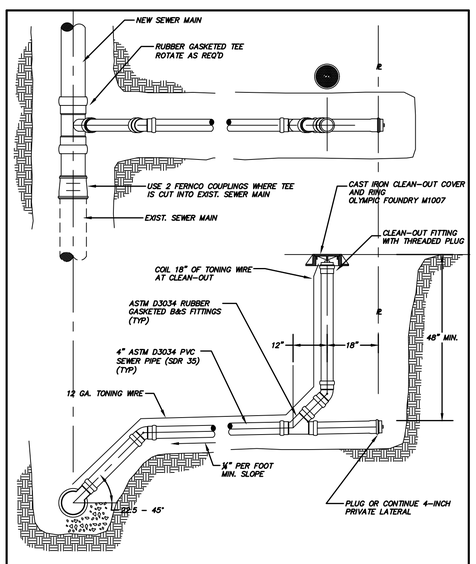

City of Rockaway Beach P.O. Box 5 Rockaway Beach, Oregon 97136 503.355.2291	STANDARD SERVICE CONNECTION AND LATERAL	DETAIL NO. S-300 9/08/03

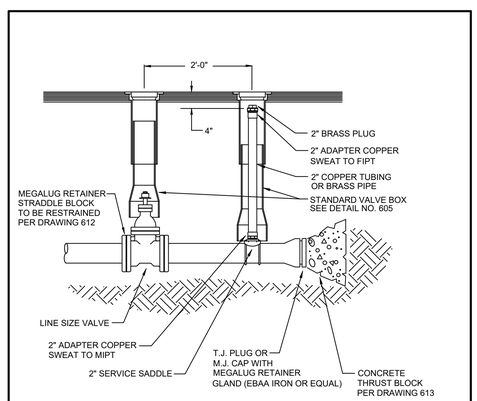

NOTES:

1. THIS BLOWOFF IS TO BE USED AT THE END OF PERMANENT CUL-DE-SACS AND AT LOW POINTS IN THE WATER LINE.
2. BLOWOFF NOT TO BE LOCATED IN GUTTER OR DITCH.
3. 2" FITTINGS SHALL BE BRASS.
4. USE COPPER OR BRASS FOR ALL PIPING.
5. THRUST BLOCK SHALL NOT BE CLOSER THAN 2' FROM PIPE JOINT.
6. THRUST BLOCK SHALL EXTEND MIN. 12" INTO UNDISTURBED SOIL AT BOTTOM AND EACH SIDE OF TRENCH.
7. BLOWOFF SIZE MUST BE IN ACCORDANCE WITH AWWA FLUSHING FLOW RATES, BUT NOT LESS THAN 2" WITH 4" BEING THE NEXT APPROVED SIZE.

City of Rockaway Beach P.O. Box 5 Rockaway Beach, Oregon 97136 503.355.2291	BLOW OFF VALVE STANDARD DETAIL	DETAIL NO. Z-01

rd364.dgn 25-JUL-2017

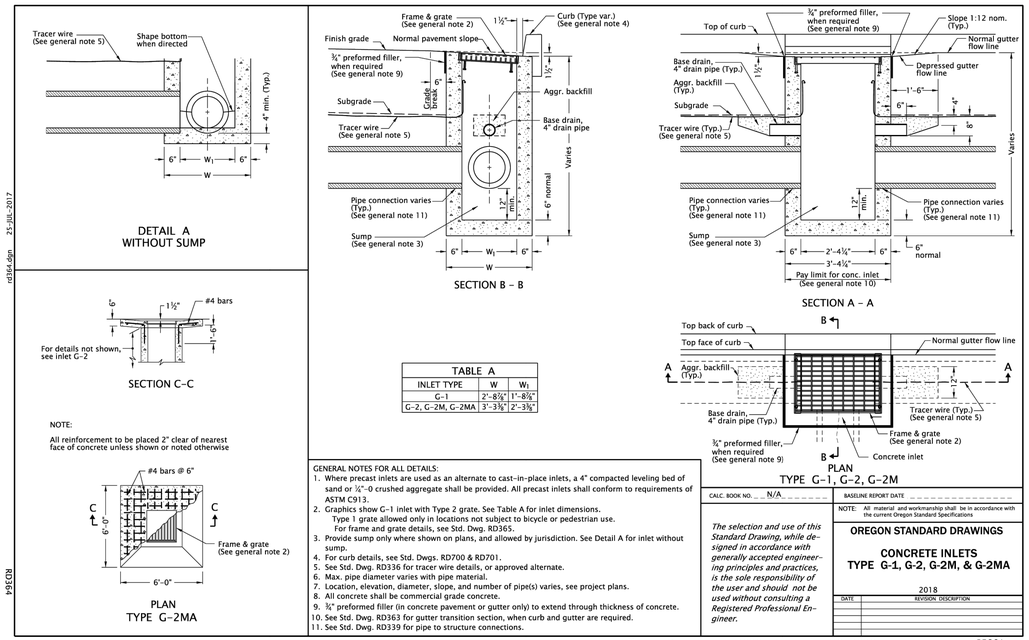

TABLE A		
INLET TYPE	W	W1
G-1	2'-8 5/8"	1'-8 5/8"
G-2, G-2M, G-2MA	3'-3 3/8"	2'-3 3/8"

GENERAL NOTES FOR ALL DETAILS:

1. Where precast inlets are used as an alternate to cast-in-place inlets, a 4" compacted leveling bed of sand or 1/4"-0 crushed aggregate shall be provided. All precast inlets shall conform to requirements of ASTM C913.
2. Graphics show G-1 inlet with Type 2 grate. See Table A for inlet dimensions.
   Type 1 grate allowed only in locations not subject to bicycle or pedestrian use.
   For frame and grate details, see Std. Dwg. RD365.
3. Provide sump only where shown on plans, and allowed by jurisdiction. See Detail A for inlet without sump.
4. For curb details, see Std. Dwgs. RD700 & RD701.
5. See Std. Dwg. RD336 for tracer wire details, or approved alternate.
6. Max. pipe diameter varies with pipe material.
7. Location, elevation, diameter, slope, and number of pipe(s) varies, see project plans.
8. All concrete shall be commercial grade concrete.
9. 3/4" preformed filler (in concrete pavement or gutter only) to extend through thickness of concrete.
10. See Std. Dwg. RD363 for gutter transition section, when curb and gutter are required.
11. See Std. Dwg. RD339 for pipe to structure connections.

CALC. BOOK NO. N/A

BASELINE REPORT DATE

NOTE: All material and workmanship shall be in accordance with the current Oregon Standard Specifications.

The selection and use of this Standard Drawing, while designed in accordance with generally accepted engineering principles and practices, is the sole responsibility of the user and should not be used without consulting a Registered Professional Engineer.

OREGON STANDARD DRAWINGS

CONCRETE INLETS
TYPE G-1, G-2, G-2M, & G-2MA

2018

DATE	REVISION DESCRIPTION

Effective Date: June 1, 2020 - November 30, 2020

RD364

REGISTERED PROFESSIONAL ENGINEER 93836PE OREGON JULY 10, 2018 MATTHEW C. DEL MORO

Matthew Del Moro, PE

EXPIRES 12/31/2025

H B H
CONSULTING ENGINEERS
501 E First Street
Newberg, Oregon 97132
503/554-9553 fax 503/537-9554
email: mail@hbh-consulting.com

Designed By: ZHH	Drawn By: JCA	Checked By: MCD	Submittal No:	BID SET

File: L:\2025-005.01\4-Design\DWG\DETAILS.dwg

REV.	DATE	DESCRIPTION	BY

0" 1"
IF THIS LINE IS NOT 1 INCH SCALE IS NOT AS SHOWN

CITY OF ROCKAWAY BEACH
PO BOX 5, ROCKAWAY BEACH, ORE. 97136

N PACIFIC ST IMPROVEMENTS PROJECT
ROCKAWAY BEACH

STANDARD DETAILS 2

Date 7/22/2025

Sheet No. C-14

14 of 14

2025-005.01